harman kardon

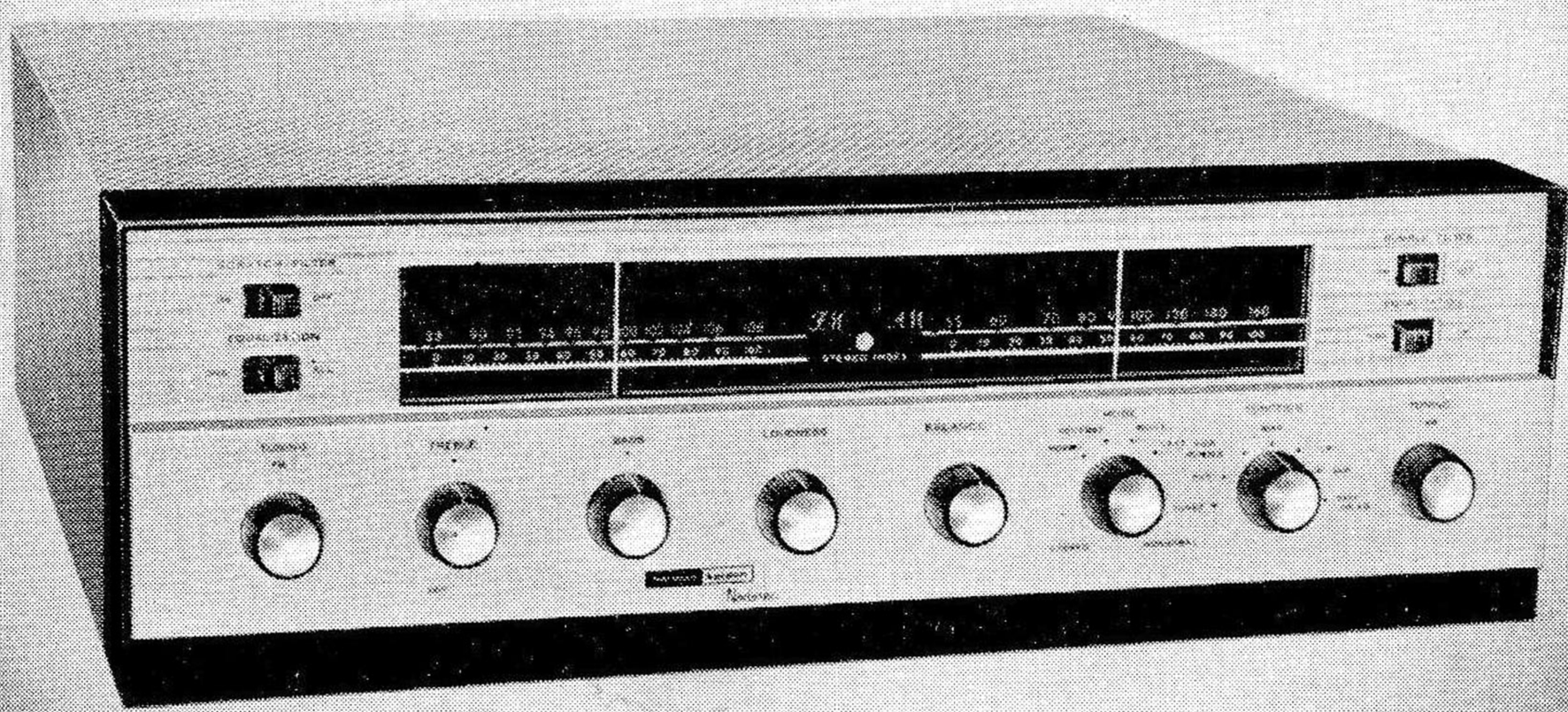

The Concerto

MODEL TP200

STEREOPHONIC AM and FM TUNER
STEREOPHONIC PREAMPLIFIER

INSTRUCTION MANUAL

It is essential you read this instruction booklet carefully before installing your high fidelity system. You have invested in an extremely fine electronic instrument into which many excellent engineering developments have been incorporated, and each is important for the proper operation of your system. This booklet has been written in simple non-technical language and if you will take time to read it first before doing anything else, you will find it simple to obtain optimum performance from your Harman-Kardon instrument.

Be sure to keep this booklet available at all times. It contains indispensable technical and service information.

This is the Harman-Kardon Stereo Symbol. It is your assurance of superb stereo performance.

www.hifiengine.com

UNPACKING

After unpacking the Concerto, inspect it carefully for signs of transit damage. The unit was subjected to many inspections and tests prior to final packing, and it therefore should be in perfect condition. If damage is visible, notify your dealer at once. If the unit was shipped to you, notify the transportation company without delay.

Check the contents of the carton thoroughly and inspect the folds of the packing material before discarding it. Your package should contain the following items:

1 Concerto, Model TP200 Stereophonic AM & FM Tuner, Stereophonic Preamplifier.
1 Instruction Booklet
1 Warranty Card
1 Mounting Template.

WARRANTY POLICY

We urge you to completely fill in your warranty card and mail it to the factory without delay to protect your rights under warranty. The warranty cards are carefully filed for reference and should you require information on the use of this high fidelity unit, or repair service, we will be able to immediately identify your set and reply quickly.

NOTE: It is necessary to receive factory authorization before returning a set for warranty repair either to the factory or to an authorized station. Repairs are to be returned on an Express Prepaid basis. A letter describing the exact difficulty must be enclosed with the unit.

WARRANTY

We warrant each Model TP200 to be free from defects in material and workmanship under normal use and service, and in accordance with the conditions herein below set forth, for a period of 1 year from date of delivery to the original purchaser, and agree to replace or repair any part or parts, with the exception of tubes which are under the manufacturer's 90 day warranty, returned to us within said 1 year, with transportation prepaid and which our examination shall disclose to our satisfaction to have been thus defective. This warranty does not include free labor, nor is it applicable to any instrument which shall have been repaired or altered in any way so as in our judgment to affect its stability or reliability nor which has been subject to neglect, misuse, abuse, negligence or accident nor which has had the serial number altered, effaced, or removed. Neither shall this warranty apply to any instrument which has been connected otherwise than in accordance with instructions furnished by us.

This warranty is expressly in lieu of all other warranties, express or implied, and of all other obligations or liability on our part, and we neither assume nor authorize any representative or other person to assume for us any other liability in connection with the sale of this instrument.

STEREOPHONIC INSTALLATION PROCEDURE

Ventilation:

The Model TP200 is well ventilated in itself, but sufficient space must be allowed around it to permit proper air flow. Install the tuner in a manner to allow for unrestricted circulation. Do not place books or other objects on the cage or in the immediate vicinity of the instrument. Reducing the air flow will result in sharply reduced component and tube life.

www.hifiengine.com

Power Requirements:

Plug the AC cord into any outlet furnishing 117 volts, 50 or 60 cycle, AC current. The voltage may vary between 105 and 125 volts. Three AC receptacles are located on the rear panel and are controlled by the on/off switch.

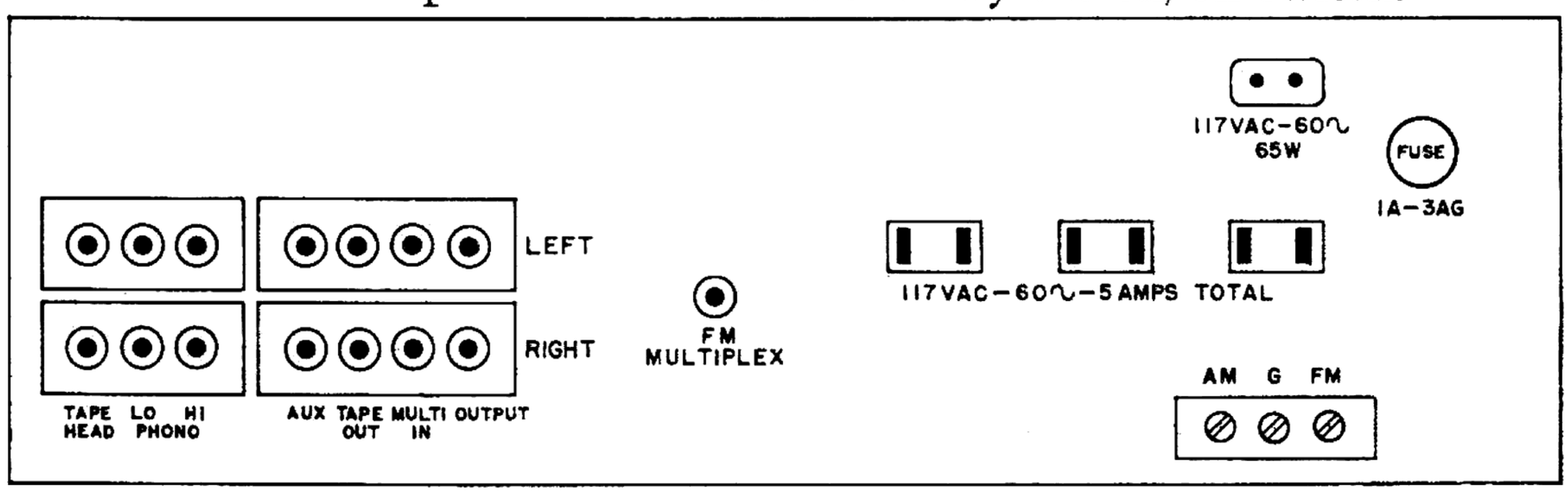

REAR PANEL MODEL TP200

Audio Output:

Two OUTPUT jacks are located on the rear of the chassis. Connect a shielded wire to the RIGHT OUTPUT jack and attach the other end of this lead to the input of your right power amplifier. Now connect a shielded wire to the LEFT OUTPUT jack and attach the other end of this lead to the input of your left power amplifier.

IMPORTANT: Connect the AC power cord on your amplifiers to the AC convenience outlets on the rear the TP200. The on/off switch on the TP200 will now control the power for all units.

Connecting Your Stereo Record Player:

A stereo cartridge uses two output connecting plugs. If you are using a low level magnetic cartridge, plug one output lead into the LEFT LO PHONO input jack located on the rear of the chassis and the other cartridge output lead into the RIGHT LO PHONO input jack.

Stereo crystal or ceramic cartridges may also be used with this amplifier. They must be plugged into the LEFT and RIGHT HI PHONO input jacks.

Connecting Your Stereo Tape Player:

A stereo tape deck utilizes two playback heads. Each head has its own output plug. Connect one plug to the LEFT TAPE HEAD input jack and the other plug to the RIGHT TAPE HEAD jack. These jacks are located on the left portion of the rear panel.

Connecting Your Stereo Tape Recorder:

Since most stereo tape recorders have their own preamplifiers, it is not desirable to plug the output of the recorder into the TAPE HEAD input jacks. This might cause overloading of the input stage. Connect one of the output plugs of your recorder into the LEFT AUX jack and the other output plug into the RIGHT AUX jack located on the rear panel of this instrument.

Connecting Your Tape Recorder to Make a Recording:

Provision is made on your Model TF200 to permit the recording of any program material. Connect the left input of your stereo tape recorder to the receptacle marked LEFT TAPE OUT and the right input of your stereo tape recorder to the receptacle marked RIGHT TAPE OUT. To connect a *monaural* tape recorder, connect its input to either LEFT or RIGHT TAPE OUT receptacle. If the program source you desire to record is plugged into the left preamplifier channel, use the LEFT TAPE OUT jack, and if it is plugged into the right preamplifier channel, use the RIGHT TAPE OUT jack. This will enable you to make a recording with the proper recording equalization as determined by your recorder, while simultaneously monitoring the program with the proper tone control, contour and loudness setting.

www.hifiengine.com

Connecting for FM Multiplex:

In those localities where FM multiplex broadcasting is available, attach your multiplex adapter to the jack on the rear of the TP200 marked FM MULTIPLEX. Follow the instructions supplied with your adapter for additional hookup information.

Connecting the FM Antenna:

Due to the high FM sensitivity of the TP200, the 48″ piece of wire supplied with the set will be sufficient antenna for all but the most difficult locations. One end of this wire should be fastened to the FM terminal on the Antenna Terminal Strip, and the other end left free and extended as may be convenient. It may be tacked or stapled to the rear of the bookcase or equipment cabinet, if necessary.

If an outdoor antenna is needed, use a folded dipole or Yagi, cut for the FM band. While a TV antenna is at times acceptable, for the best possible reception an FM antenna should be used. Attach the 300 ohm lead-in wire to terminals FM and G on the rear of the instrument.

Connecting the AM Antenna:

The ferrite loopstick built into the TP200 comprises all the antenna required for good signal areas. In more remote locations an additional outdoor antenna may be required. This should consist of a single wire, as long as is reasonably practical. It must be kept away from large metal objects, power lines or electrical machinery to insure reception without extraneous noise.

Connect one end of the outdoor antenna wire to the rear Antenna Terminal marked AM.

OPERATING THE MODEL TP200 AS A STEREOPHONIC PREAMPLIFIER AND TUNER.

Every control on a well designed and honestly considered high fidelity instrument has a specific useful function related to each of the other controls. A brief explanatory note on the relationship of the various front panel controls will doubtless prove useful in organizing and clarifying them for you.

The Model TP200 incorporates the following front panel controls. Viewing the instrument from left to right you will note the FM TUNING control, TREBLE control (on/off switch is incorporated in this control), BASS control, LOUDNESS control, BALANCE control, MODE switch, FUNCTION SELECTOR switch and AM TUNING control. On the upper left section of the front panel you will note a CONTOUR switch and a SCRATCH FILTER switch. On the upper right section there is an EQUALIZATION switch and a RUMBLE FILTER switch.

TECHNICAL EXPLANATION OF THE CONTROLS

Since a stereo preamplifier is actually two preamplifiers in one, the number of operating controls would normally be doubled. This would make operation unnecessarily cumbersome. For convenience the duplicate controls are mechanically tied together, or ganged, to be operated by one knob.

Bass and Treble:

The BASS and TREBLE controls on the Model TP200 provide the full range of tonal adjustment necessary for high fidelity listening. These controls can either boost or cut the bass and treble tones of the stereo system. The controls should be set in accordance with your hearing preference, speaker characteristics and room acoustics.

Loudness Control:

This control adjusts the volume level of any program material fed into your stereo system. Its effect can be modified by the CONTOUR switch.

www.hifiengine.com

Contour Switch:

One of the limitations of human hearing is its tendency to lose sensitivity to the very low pitched sounds, as the program sound level is reduced. It is this characteristic (known as the Fletcher-Munson effect) which causes one to play music programs at high listening level in order to experience the full rich tone available from fine modern recordings. The Harman-Kardon CONTOUR switch compensates for the Fletcher-Munson effect thus eliminating high listening levels as a requisite for full enjoyment of reproduced music.

For low level listening throw the CONTOUR switch located on the front panel to the "ON" position. You will note how the low frequencies become more apparent while the volume level remains unchanged.

Balance Control:

The nature of stereo reproduction is such that it requires two identical channels to attain the highest degree of faithfulness and spatial distribution. Any variation in the efficiency of one channel as compared to the other will disturb this relationship. Since there may be slight differences between the two speakers, tape heads, etc., the TP200 includes a control to balance one channel against the other. Sufficient range is covered by this control to permit rebalancing of the overall system even in cases where major unbalance exists. It is entirely to be expected that this control will be set anywhere within its range to attain system balance.

When the BALANCE control is properly set, the apparent sound source will lie in a broad area between the two speakers. When the BALANCE control is rotated to the right the sound will move to the right and when the control is rotated to the left, the sound will move to the left.

Mode Switch:

The MODE switch selects between stereo operation, where a stereo program source is available, and monaural operation utilizing the full power of both channels and both speakers when the program source is monaural only.

This switch has five positions, REVERSE, STEREO, MON, RIGHT and LEFT. REVERSE interchanges the channels so that the program source appearing at the left speaker now appears at the right and the program source appearing at the right speaker reverses to the left. STEREO enables the speakers to operate in the manner in which they are normally connected. When you desire to play a monaural record utilizing your stereo cartridge, the MODE switch should be set to MON. This combines the left and right channel for optimum performance. RIGHT and LEFT can be used for stereo as well as for monaural operation. Setting the MODE switch to RIGHT when the amplifier is connected for stereo reproduction allows any program material being fed into the right stereo inputs to be reproduced by both speakers simultaneously. If the program source is stereo then only the right channel of the program will be heard through both speakers. Setting the MODE switch to LEFT allows all program material being fed into the left stereo inputs to be reproduced by both speakers simultaneously. If the program source is stereo then only the left channel of the program will be heard through both speakers.

Function Selector Switch:

The FUNCTION SELECTOR switch selects the desired type of program source and has 8 switching positions. AUX selects any device plugged into the two rear auxiliary input jacks. AM selects the AM tuner for operation; FM selects the FM tuner for operation; FM-AFC selects FM, but with the addition of an automatic frequency control circuit; AM-FM selects both AM and FM tuners for simultaneous stereo operation. FM MULTIPLEX activates the FM-Multiplex jacks on the rear for multiplex reception. PHONO selects your stereo phonograph and TAPE HD selects your stereo playback tape deck.

www.hifiengine.com

Rumble Filter:

At times, record changers, records and even some turntables produce an objectionable low frequency signal that is strong enough to be introduced into the sensitive playback system. Known as "Rumble" this undesirable signal can be eliminated by the special RUMBLE FILTER switch incorporated in the Model TP200. Whenever rumble is encountered, set the switch to "ON".

Equalization Switch:

Records and tapes are recorded with special emphasis and deemphasis of certain frequencies in order to achieve maximum dynamic range. To play back your records and tapes faithfully, it is necessary to "equalize" their frequency response.

When playing your stereophonic records set the EQUALIZATION switch to the RIAA position. It is not necessary to use the EUR position since all stereophonic recordings are recorded only with the RIAA equalization curve.

When you are using your tape deck through the TAPE HEAD input jacks, set the EQUALIZATION switch to either 3¾ or 7½ depending on the tape speed used. Proper playback equalization is then automatically selected.

Scratch Filter:

Whenever annoying record scratch is present, throw the SCRATCH FILTER switch to "ON".

AM and FM Tuning Controls:

These controls operate in the conventional manner. Merely turn the controls until you have tuned in the desired AM or FM station.

For AM/FM stereophonic reproduction it is necessary to separately tune the FM and AM stations. To facilitate this, set the FUNCTION SELECTOR switch to FM and carefully tune to the desired station. Now set the FUNCTION SELECTOR switch to AM and tune to the same program on AM. After carefully tuning the FM and AM bands, set the FUNCTION SELECTOR switch to AM-FM and adjust the BALANCE control for proper sound distribution from the two speakers.

FM-AFC:

FM broadcasting, by its very nature, eliminates almost all natural and man-made static. However, the characteristics of FM which makes this possible also causes problems in tuning. The TP200 incorporates a special electronic circuit known as Automatic Frequency Control that overcomes these problems and insures proper tuning even if the manual tuning is not accurately done. Therefore AFC always keeps the station in the center of the channel and eliminates distortion caused by inaccurate tuning.

In order to take maximum advantage of the benefits of AFC, it is suggested that fine tuning be done with the Function Switch in the FM position. When the switch is then turned to the FM-AFC position the AFC will improve this careful tuning by a factor of 10 to 1. This procedure is especially recommended when a weak station is being tuned on a channel adjacent to a stronger one. This will prevent the AFC from reaching for the more powerful signal and skipping over the weaker one. If the weaker station is tuned in without the AFC, when the AFC is applied it will lock it in permanently.

Indexing the Stations:

Station Index Pins are supplied with this tuner in order to facilitate station identification. These may be used for monaural or stereo operation.

Tune to your favorite FM and AM stations and insert an Index Pin at the exact spot where each station comes in. The pin inserts directly into the cushion located in front of the dial glass.

You will note the pins come in various colors for easy identification. Use pins of the same color for the AM and FM locations of the same station. This will help you tune to your favorite stations without unnecessary program searching.

www.hifiengine.com

ADDITIONAL INFORMATION

How To Play A Monaural LP Record:

If you have been playing stereo records, merely remove the stereo record and put on a monaural record. It's as simple as that! All stereo record players and phonographs using quality stereo cartridges are completely compatible with monaural LP records. LP's and stereos may be intermixed on any good stereo record changer.

MONAURAL INSTALLATION OF THE MODEL TP200.

INSTALLATION PROCEDURE

Ventilation:

The unit is well ventilated in itself, but sufficient space must be allowed around it to permit proper air flow. Install the amplifier in a manner to allow for unrestricted circulation. Do not place books or other objects on the cage or in the immediate vicinity of the instrument. Reducing the air flow will result in sharply reduced component and tube life.

Power Requirements:

Plug the AC cord into any outlet furnishing 117 volts 50 or 60 cycle AC current. The voltage may vary between 105 and 125 volts. Three AC convenience outlets are located on the rear of the instrument, and are controlled by the on/off switch.

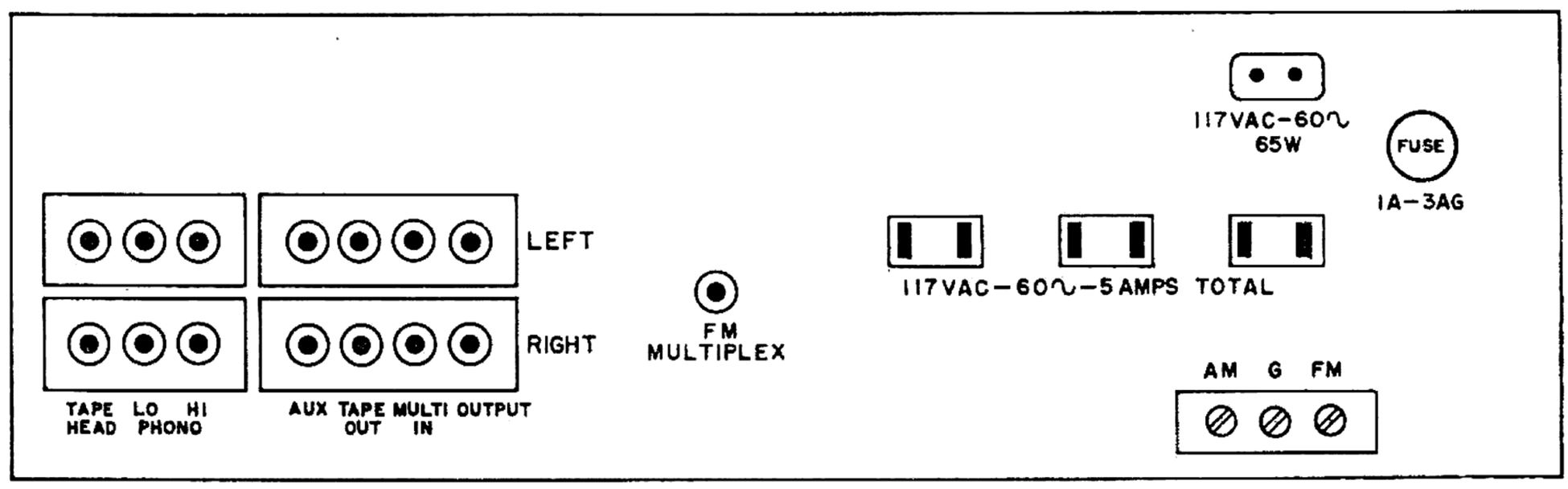

REAR PANEL MODEL TP200

Audio Output:

Two OUTPUT jacks are located on the rear of the chassis. Connect a shielded wire to either the Right or Left OUTPUT jack and attach the other end of this lead to the input jack on your power amplifier.

IMPORTANT: Connect the AC power cord on your monaural amplifier to one of the AC convenience outlets on the rear of the TP200. The on/off switch on the TP200 will now control the power for both units.

Connecting Your Record Player:

Any type of record player may be used with this amplifier. If your player uses a low level magnetic cartridge plug it into either the LEFT or RIGHT LO PHONO input. If you are using a monaural ceramic or crystal cartridge plug it into either the LEFT or RIGHT PHONO-HI input.

Connecting Your Tape Player:

Connect your monaural tape deck to either the Left or Right TAPE HEAD input jack.

Connecting Your Tape Recorder:

Since most monaural tape recorders have their own preamplifier, it is not desirable to plug the output of the recorder into the TAPE HEAD jack. This might cause overloading of the input stage. Connect the recorder output plug to either LEFT or RIGHT AUX jack on the rear panel.

www.hifiengine.com

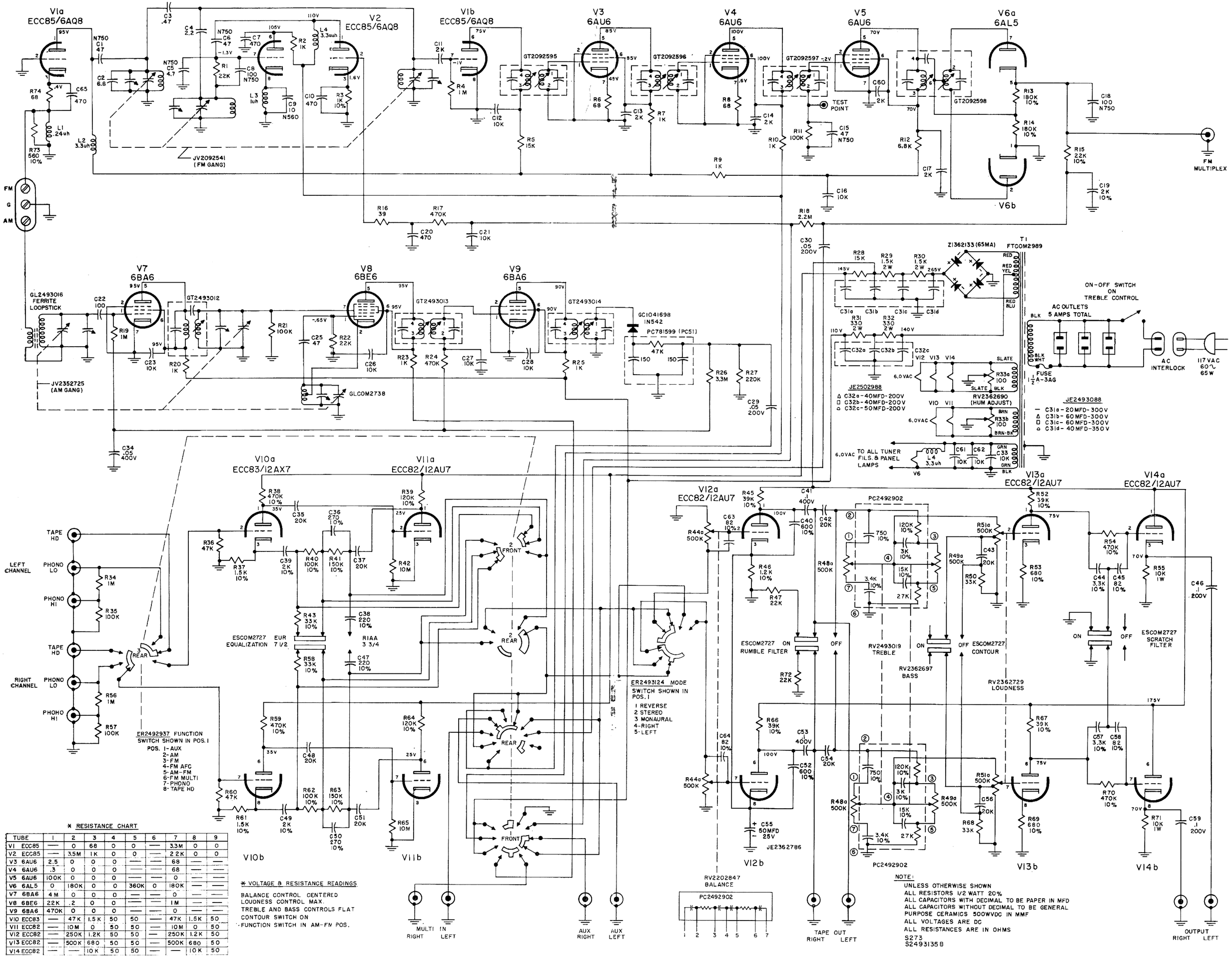

* RESISTANCE CHART

TUBE	1	2	3	4	5	6	7	8	9
V1 ECC85	—	0	68	0	0	—	3.3M	0	0
V2 ECC85	—	3.5M	1K	0	0	—	2.2K	0	0
V3 6AU6	2.5	0	0	0	—	—	68	—	—
V4 6AU6	.3	0	0	0	—	—	68	—	—
V5 6AU6	100K	0	0	0	—	—	0	—	—
V6 6AL5	0	180K	0	0	360K	0	180K	—	—
V7 6BA6	4M	0	0	0	—	—	0	—	—
V8 6BE6	22K	.2	0	0	—	—	1M	—	—
V9 6BA6	470K	0	0	0	—	—	0	—	—
V10 ECC83	—	47K	1.5K	50	50	—	47K	1.5K	50
V11 ECC82	—	10M	0	50	50	—	10M	0	50
V12 ECC82	—	250K	1.2K	50	50	—	250K	1.2K	50
V13 ECC82	—	500K	680	50	50	—	500K	680	50
V14 ECC82	—	—	10K	50	50	—	—	10K	50

* VOLTAGE & RESISTANCE READINGS.

BALANCE CONTROL CENTERED
LOUDNESS CONTROL MAX.
TREBLE AND BASS CONTROLS FLAT
CONTOUR SWITCH ON
FUNCTION SWITCH IN AM-FM POS.

Connecting Your Tape Recorder To Make A Recording:

Provision is made on your Model TP200 to permit the recording of any program material. Connect the input of your monaural tape recorder to either the LEFT or RIGHT TAPE OUT receptacle located on the rear panel. If the program source you desire to record is plugged into the left preamplifier channel, use the LEFT TAPE OUT jack and if it is plugged into the right preamplifier channel, use the RIGHT TAPE OUT jack. This will enable you to make a recording with the proper recording equalization as determined by your recorder, while simultaneously monitoring the program with the proper tone control, contour and loudness setting.

Connecting Auxiliary Monaural Equipment:

A TV tuner or other similar device with a high output level may be connected to either the LEFT or RIGHT AUX jack on the rear panel.

Connecting the FM Antenna:

Due to the high FM sensitivity of the TP200, the 48" piece of wire supplied with the set will be sufficient antenna for all but the most difficult locations. One end of this wire should be fastened to the FM terminal on the Antenna Terminal Strip, and the other end left free and extended as may be convenient. It may be tacked or stapled to the rear of the bookcase or equipment cabinet, if necessary.

If an outdoor antenna is needed, use a folded dipole or Yagi, cut for the FM band. While a TV antenna is at times acceptable, for the best possible reception an FM antenna should be used. Attach the 300 ohm lead-in wire to terminals FM and G on the rear of the instrument.

Connecting the AM Antenna:

The ferrite loopstick built into the TP200 comprises all the antenna required for good signal areas. In more remote locations an additional outdoor antenna may be required. This should consist of a single wire, as long as is reasonably practical. It must be kept away from large metal objects, power lines or electrical machinery to insure reception without extraneous noise.

Connect one end of the outdoor antenna wire to the rear Antenna Terminal marked AM.

OPERATING THE MODEL TP200 AS A MONAURAL PREAMPLIFIER AND TUNER

Every control on a well designed and honestly considered high fidelity instrument has a specific useful function, related to each of the other controls. A brief explanatory note on the relationship of the various front panel controls will doubtless prove useful in organizing and clarifying them for you.

The Model TP200 incorporates the following front panel controls. Viewing the instrument from left to right you will note the FM TUNING control, TREBLE control (on/off switch is incorporated in this control), BASS control, LOUDNESS control, BALANCE control, MODE switch, FUNCTION SELECTOR switch and AM TUNING control. On the upper left section of the front panel you will note a CONTOUR switch and a SCRATCH FILTER switch. On the upper right section there is an EQUALIZATION switch and a RUMBLE FILTER switch.

TECHNICAL EXPLANATION OF THE CONTROLS

Bass and Treble:

These controls provide the full range of tonal adjustment necessary for high fidelity listening. These controls can either boost or cut the bass and treble tones of your monaural system. The controls should be set in accordance with your hearing preference, speaker characteristics and room acoustics.

www.hifiengine.com

Loudness Control:

This control adjusts the volume level of any program material fed into your high fidelity system. Its effect can be modified by the CONTOUR Switch.

Contour Switch:

One of the limitations of human hearing is its tendency to lose sensitivity to the very low pitched sounds, as the program sound level is reduced. It is this characteristic (known as the Fletcher-Munson effect) which causes one to play music programs at high listening level in order to experience the full rich tone available from fine modern recordings. The Harman-Kardon CONTOUR Switch compensates for the Fletcher-Munson effect, thus eliminating high listening levels as a requisite for full enjoyment of reproduced music.

For low level listening throw the CONTOUR Switch located on the front panel to the "ON" position. You will note how the low frequencies become more apparent while the volume level remains unchanged.

Balance Control:

This control has no function in monaural listening and should be left in the center position. If rotated to either extreme position, it would completely shut off the preamplifier on that side.

Mode Switch:

The MODE switch has three positions for monaural operation. When playing monaural records with a stereo cartridge the MODE switch must be set to MON. This combines the left and right channels for optimum performance. RIGHT and LEFT selects between the two preamplifiers. If your monaural cartridge is connected to the left phono input, then the MODE switch must be set to LEFT position to activate the left preamplifier. By using the MODE switch to select between RIGHT and LEFT preamplifiers this allows for twice the usual number of input jacks found on ordinary monaural amplifiers.

STEREO and RIGHT positions are identically connected and will activate the Right preamplifier. REVERSE and LEFT are identically connected and will activate the Left preamplifier.

For simplicity, it is suggested to use only the RIGHT and LEFT positions on the MODE switch for monaural operation. Switch to RIGHT or LEFT as a function of the preamplifier you wish to use.

Function Selector Switch:

The FUNCTION SELECTOR switch selects the desired type of program source and has 8 positions. AUX selects any monaural device plugged into either of the rear auxiliary inputs. AM selects the AM tuner for operation; FM selects the FM Tuner; FM-AFC selects FM, but with the addition of an automatic frequency control circuit. The AM-FM position in monaural operation will enable you to listen only to FM. The FM-MULTIPLEX position will be inoperative for monaural. PHONO selects your monaural phonograph and TAPE HD selects your monaural tape deck.

Rumble Filter:

At times, record changers, records and even some turntables produce an objectionable low frequency signal that is strong enough to be introduced into the sensitive playback system. Known as "Rumble", this undesirable signal can be eliminated by the special RUMBLE FILTER switch incorporated in the Model TP200. Whenever rumble is encountered, set the switch to "ON".

Equalization Switch:

Records and tapes are recorded with special emphasis and deemphasis of certain frequencies in order to achieve maximum dynamic range. To play back your records and tapes faithfully, it is necessary to "equalize" their frequency response.

www.hifiengine.com

When playing your monaural records set the EQUALIZATION switch to the RIAA or EUR position depending on the recommendation of the record company. If you are in doubt as to the proper equalization setting, set the switch for best listening quality.

When you are using your monaural tape deck through the TAPE HEAD input jack, set the equalization switch to either 3¾ or 7½ depending on the tape speed used. Proper playback equalization is then automatically selected.

Scratch Filter:

Whenever annoying record scratch is present, throw the SCRATCH FILTER to "on".

AM and FM Tuning Controls:

These controls operate in the conventional manner. Merely turn the controls until you have tuned in the desired AM or FM station.

FM-AFC:

FM broadcasting, by its very nature, eliminates almost all natural and man-made static. However, the characteristics of FM which makes this possible also causes problems in tuning. The TP200 incorporates a special electronic circuit known as Automatic Frequency Control that overcomes these problems and insures proper tuning even if the manual tuning is not accurately done. Therefore AFC always keeps the station in the center of the channel and eliminates distortion caused by inaccurate tuning.

In order to take maximum advantage of the benefits of AFC, it is suggested that fine tuning be done with the FUNCTION Switch in the FM position. When the switch is then turned to the FM-AFC position the AFC will improve this careful tuning by a factor of 10 to 1. This procedure is especially recommended when a weak station is being tuned on a channel adjacent to a stronger one. This will prevent the AFC from reaching for the more powerful signal and skipping over the weaker one. If the weaker station is tuned in without the AFC, when the AFC is applied it will lock it in permanently.

Indexing the Stations:

Station Index Pins are supplied with this tuner in order to facilitate station identification. These may be used for monaural or stereo operation.

Tune to your favorite FM and AM stations and insert an Index Pin at the exact spot where each station comes in. The pin inserts directly into the cushion located in front of the dial glass.

You will note the pins come in various colors for easy identification. Use pins of the same color for the AM and FM locations of the same station. This will help you tune to your favorite stations without unnecessary program searching.

ADJUSTMENTS

Hum Adjustment:

Two hum adjustment controls are located at the rear of the AM tuning gang and are accessible from the top or bottom of the chassis. The cage must be removed to make the adjustment from above.

These controls adjust the low and high level hum on the TP200. Each operates simultaneously to adjust both left and right channels. To adjust for minimum hum, set the FUNCTION SELECTOR switch to AUX. Disconnect the cable of any device connected to the AUX input and then turn the LOUDNESS control full on. While listening to either speaker, adjust the HIGH LEVEL hum control for minimum hum. Now set the FUNCTION SELECTOR switch to the PHONO position and set the LOW LEVEL hum control for minimum hum.

www.hifiengine.com

System Hum or Noise:

In any high fidelity installation, hum may be caused by the interconnection of a record changer, tuner and amplifier, as a result of the cables and different grounds. A good way to eliminate this problem is to first disconnect everything but the speakers from the amplifier, and listed for hum. If the hum persists, make the hum adjustments described above. Try reversing the TP200 power plug. Now plug in the record player. If hum appears, try reversing the record player power plug, and try connecting a wire from the record player chassis to the amplifier chassis. In this way, connect the tuner, tape deck and other devices in turn.

Note that hum may be picked up by defective interconnecting cables, and by interconnecting cables running too close to power cables.

MAINTENANCE AND REPAIRS

Fuse:

In the event of a potentially damaging failure of tubes or components, the Model TP200 is protected by a 1 ampere, type 3AG fuse, located on the rear of the unit. If this fuse is blown, it should be replaced only with one of the same rating. Replacing with a fuse of higher rating will not protect the amplifier, and may result in severe damage, which will not be covered by the factory warranty.

Routine Maintenance:

Due to the conservative design and high quality components of the Model TP200, no routine maintenance other than yearly tube checking is advised. Occasional resetting of the hum adjustments will keep the unit operating at peak efficiency.

Repair:

Only the most qualified service technician should be employed, as special equipment and training is required to properly service a high fidelity instrument. This manual contains information of great value to the repairman, and should be kept available.

Factory Warranty Stations are maintained in most major cities. For the address of the nearest one, or for any other information relating to your Harman-Kardon products, write to the attention of the Customer Service Department, Harman-Kardon, Inc., 520 Main St., Westbury, N. Y. Be sure to include the model and serial number of the set in question. A short description of your complete installation is often of help in answering your questions.

SERVICE NOTES

Servicing printed wiring is a relatively simple matter and is no more complicated than servicing conventionally wired circuits. No special tools or skills are required and if you follow the outlined procedure, a repair can be easily made.

Avoid damage to the copper foil. Remove components carefully. If the copper is damaged, the broken spot may be jumped with a small piece of wire or bridged with molten solder.

Avoid damage to the printed board. Do not press the board, especially when changing tubes. The board is sturdy in construction, but may break if proper care is not taken when servicing.

Avoid excessive solder deposits. In some areas on the board, wiring is closely spaced. Be careful not to bridge two leads with excessive solder. This may cause a short or intermittent trouble.

Avoid overheating. Use an iron rated at 35 watts or less and do not hold the iron to the connection for a longer period of time than necessary.

Tools and materials required: low wattage iron, small wire brush, 60% tin — 40% lead low temperature solder-rosin core, thin bladed knife and a small pick or soldering aid.

www.hifiengine.com

SPECIFICATIONS

FM

Sensitivity:	5 μv (30 db quieting) 2.5 μv (20 db quieting)
Selectivity:	240 KC Bandwidth: 6 db down.
Discriminator Peak to Peak	0.6 megacycles.
Frequency Range:	88-108 M.C.
Drift:	±5 KC Maximum.
Image Rejection:	40 db.
IF Rejection:	60 db.
Antenna Input:	300 ohms.
Distortion:	Less than 0.5% IM at 30% modulation.
	Less than 3% IM at 100% modulation.
Frequency Response:	±0.75 db 30-15,000 c.p.s. including de-emphasis.
Hum Level:	60 db below 100% modulation.
Radiation:	Within FCC requirements.

AM

Sensitivity:	80 μv per meter. Terminal sensitivity 10 μv.
Selectivity:	10 KC Bandwidth: 6 db down.
Frequency Range:	530-1640 KC.
Image Rejection:	55 db.
IF Rejection:	55 db.
Hum Level:	55 db below 80% modulation.
Frequency Response:	±3 db. 20-5,000 c.p.s.

Audio

Frequency Response:	±0.5 db 15-30,000 c.p.s.
Distortion:	Less than 0.2% harmonic & IM at 2 Volt R.M.S.
Cross Talk:	50 db.
Tone Control Range:	±12 db 50 and 10,000 c.p.s.
Output Level:	1.5 Volt from cathode follower.

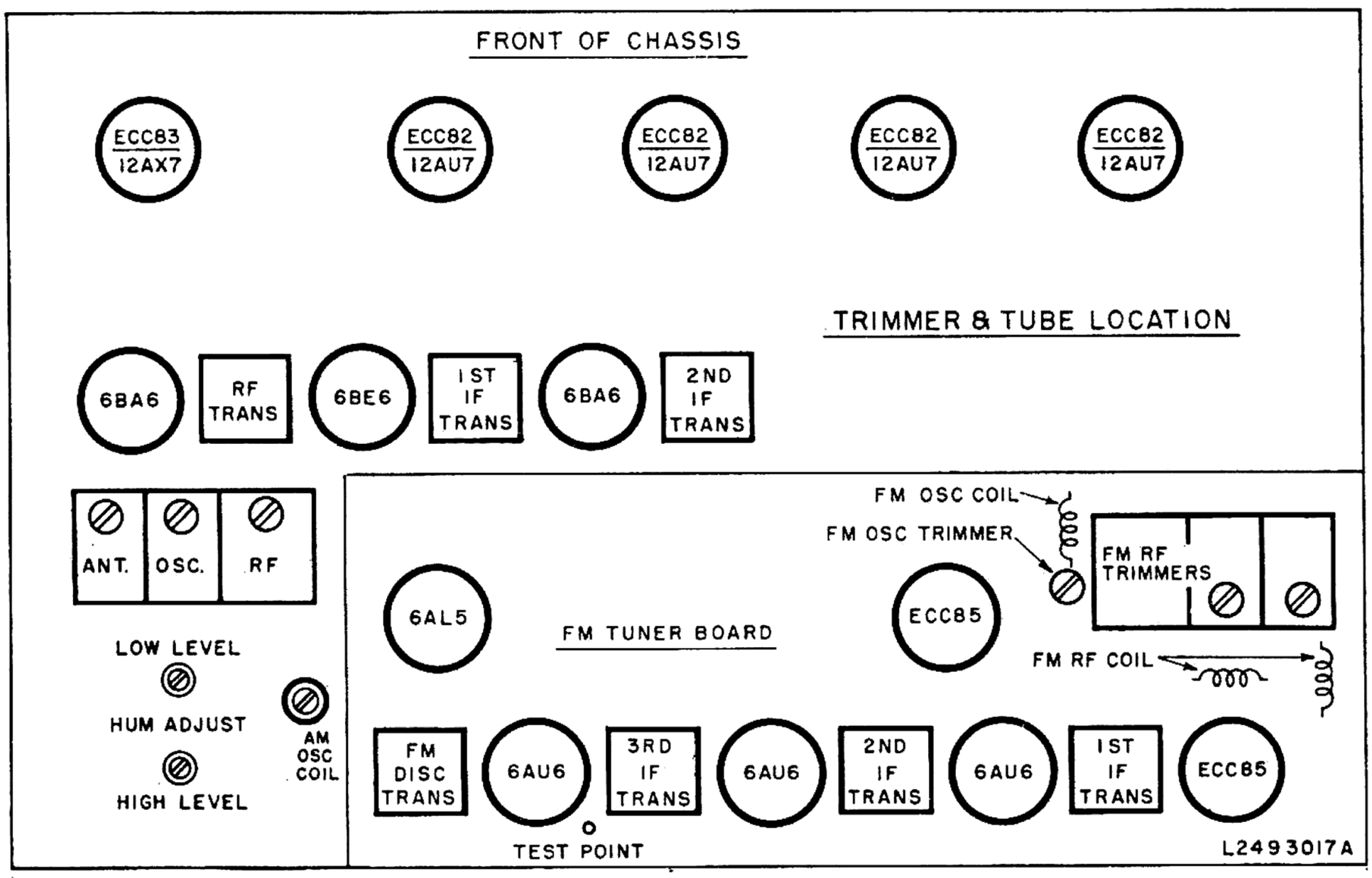

LIST OF REPLACEABLE PARTS

H-K Part No.	Description	List Price
ESCOM2727	SWITCH, SLIDE	.40
RV2493019	CONTROL, TREBLE	3.55
RV2362697	CONTROL, BASS	2.80
RV2362729	CONTROL, LOUDNESS	2.25
RV2202847	CONTROL, BALANCE	2.25
ER2493124	SWITCH, MODE	1.25
ER2492937	SWITCH, FUNCTION	4.00
FTCOM2989	TRANSFORMER, POWER	14.00
Z1362133	RECT. SEL 65 MA	1.75
RV2362690	TWIN POT 100 OHMS	1.30
GLCOM3011	AM. OSCILLATOR COIL	.60
JE2493088	CAPACITOR ELECT. 40 MFD/350	3.95
JE2502988	CAPACITOR ELECT. 50-40-40 MFD/200V	2.50
JV2352725	CAPACITOR, VARIABLE	4.25
GT2493013	TRANS. 1*st* IF CHASSIS MOUNT	1.50
GT2493014	TRANS. 2*nd* IF CHASSIS MOUNT	1.50
Z24614	TRANS. MTG CLIP–AUTO #1041	.05
P2492963	DIAL GLASS	1.00
P35944	DIAL GLASS CLIPS	.10
GL2493016	ANTENNA LOOPSTICK	2.00
P481329	RING, LOOPSTICK TUNING	.05
GT2493012	RF TRANSFORMER CHASSIS MOUNTING	2.50

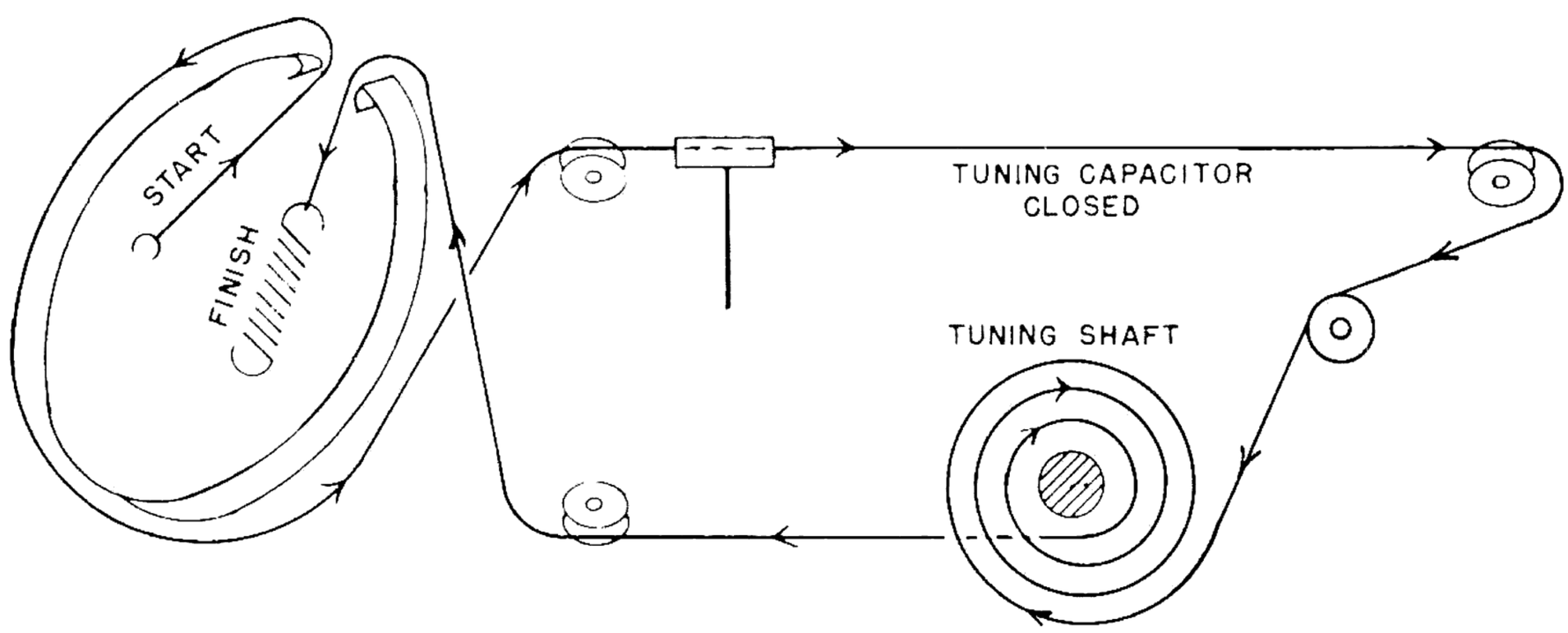

FM STRINGING DIAGRAM

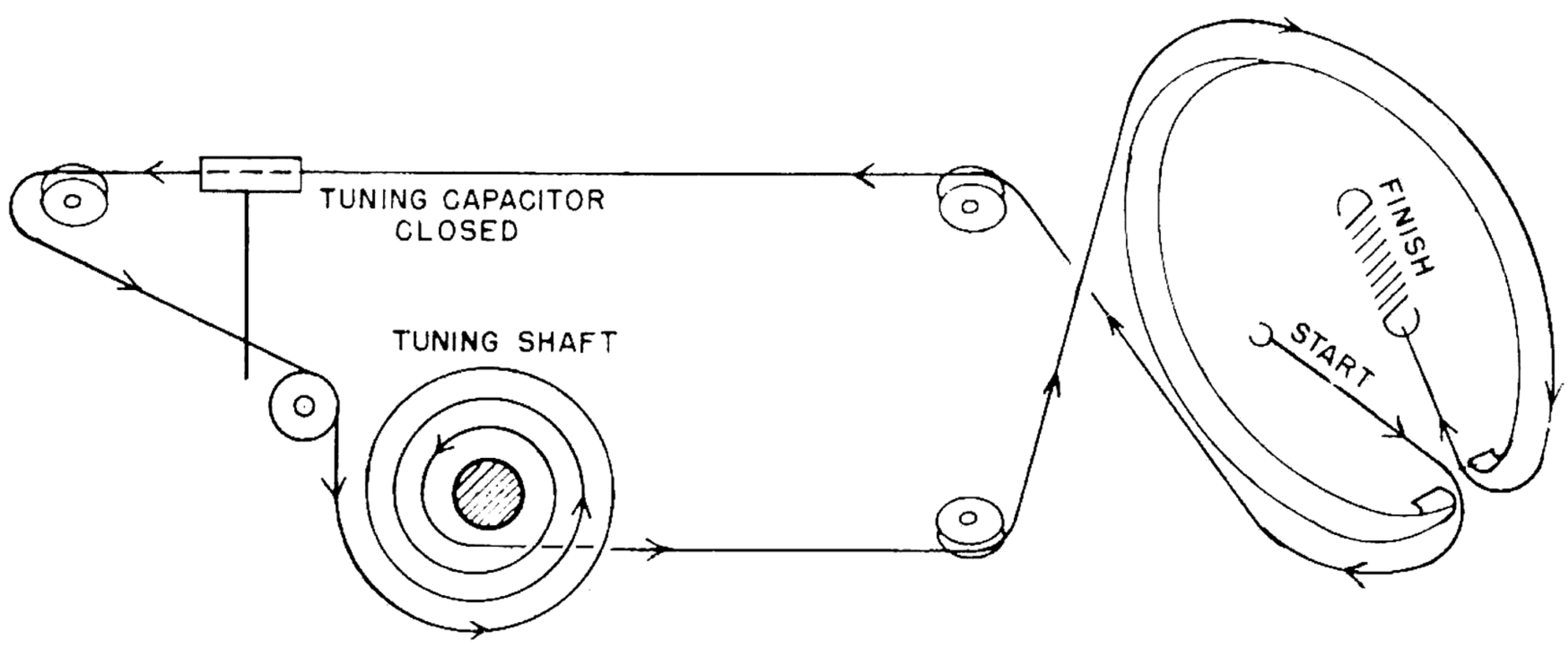

AM STRINGING DIAGRAM

www.hifiengine.com

ALIGNMENT PROCEDURE

FUNCTION SWITCH SETTING	SIGNAL GENERATOR FREQ.	SIGNAL GENERATOR MOD.	SIGNAL INPUT POINT	OUTPUT INDICATOR	CONNECT INDICATOR TO:	DIAL SETTING	ADJUST	OUTPUT INDICATION
FM	10.7 MC	300 KC FM 60 CPS	FM MIXER GANG	AC-VTVM OR SCOPE	TEST POINT		3 FM IF TRANS.	MAX GAIN & SYMMETRY
FM	10.7 MC	300 KC FM 60 CPS	FM MIXER GANG	AC-VTVM OR SCOPE	TUNER OUTPUT		DISCR. TRANS.	S PATTERN OF MAX GAIN & SYMM.
FM	106 MC	300 KC FM 60 CPS	FM ANT. TERMINAL	AC-VTVM OR SCOPE	TEST POINT	106 MC	106 MC OSC RF. MIXER TRIMMERS	MAXIMUM OUTPUT
FM	90 MC	300 KC FM 60 CPS	FM ANT. TERMINAL	AC-VTVM OR SCOPE	TEST POINT	90 MC	OSC. RF. MIXER COILS	MAXIMUM OUTPUT

FUNCTION SWITCH SETTING	SIGNAL GENERATOR FREQ.	SIGNAL GENERATOR MOD.	SIGNAL INPUT POINT	OUTPUT INDICATOR	CONNECT INDICATOR TO:	DIAL SETTING	ADJUST	OUTPUT INDICATION
AM	455 KC	30% AM	AM RF GANG	AC-VTVM OR SCOPE	TUNER OUTPUT	1600 KC	2 AM IF TRANS.	MAXIMUM OUTPUT
AM	1400 KC	30% AM	AM ANT. TERM.	AC-VTVM OR SCOPE	TUNER OUTPUT	1400 KC	OSC, ANT & RF TRIMMERS	MAXIMUM OUTPUT
AM	600 KC	30% AM	AM ANT. TERM.	AC-VTVM OR SCOPE	TUNER OUTPUT	600 KC	OSC COIL LOOPSTICK & RF TRANS	MAXIMUM OUTPUT
AM	1400 KC				REPEAT STEP 2			

Harman-Kardon high fidelity instruments incorporate advanced production techniques as well as advanced circuit features. They reflect the highest state of the art of fine audio equipment. We hope your unit provides you with many hours of listening enjoyment.

Our Customer Service Department is maintained to answer your correspondence about High Fidelity and to make recommendation of appropriate companion accessories. Please feel free to write without obligation.

harman kardon

520 MAIN STREET
WESTBURY, L. I., N. Y.

www.hifiengine.com

harman kardon

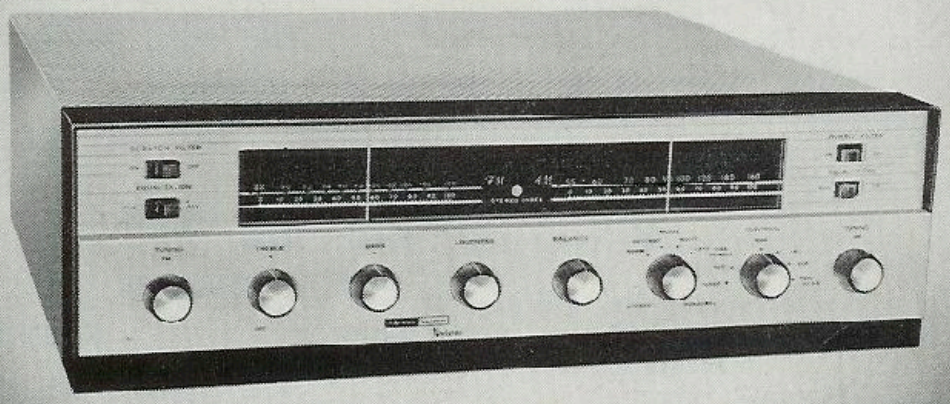

The Concerto

MODEL TP200

Serial No 2731041

STEREOPHONIC AM and FM TUNER
STEREOPHONIC PREAMPLIFIER

INSTRUCTION MANUAL

It is essential you read this instruction booklet carefully before installing your high fidelity system. You have invested in an extremely fine electronic instrument into which many excellent engineering developments have been incorporated, and each is important for the proper operation of your system. This booklet has been written in simple non-technical language and if you will take time to read it first before doing anything else, you will find it simple to obtain optimum performance from your Harman-Kardon instrument.

Be sure to keep this booklet available at all times. It contains indispensable technical and service information.

This is the Harman-Kardon Stereo Symbol. It is your assurance of superb stereo performance.

UNPACKING

After unpacking the Concerto, inspect it carefully for signs of transit damage. The unit was subjected to many inspections and tests prior to final packing, and it therefore should be in perfect condition. If damage is visible, notify your dealer at once. If the unit was shipped to you, notify the transportation company without delay.

Check the contents of the carton thoroughly and inspect the folds of the packing material before discarding it. Your package should contain the following items:

1 Concerto, Model TP200 Stereophonic AM & FM Tuner, Stereophonic Preamplifier.

1 Instruction Booklet

1 Warranty Card

1 Mounting Template.

WARRANTY POLICY

We urge you to completely fill in your warranty card and mail it to the factory without delay to protect your rights under warranty. The warranty cards are carefully filed for reference and should you require information on the use of this high fidelity unit, or repair service, we will be able to immediately identify your set and reply quickly.

NOTE: It is necessary to receive factory authorization before returning a set for warranty repair either to the factory or to an authorized station. Repairs are to be returned on an Express Prepaid basis. A letter describing the exact difficulty must be enclosed with the unit.

WARRANTY

We warrant each Model TP200 to be free from defects in material and workmanship under normal use and service, and in accordance with the conditions herein below set forth, for a period of 1 year from date of delivery to the original purchaser, and agree to replace or repair any part or parts, with the exception of tubes which are under the manufacturer's 90 day warranty, returned to us within said 1 year, with transportation prepaid and which our examination shall disclose to our satisfaction to have been thus defective. This warranty does not include free labor, nor is it applicable to any instrument which shall have been repaired or altered in any way so as in our judgment to affect its stability or reliability nor which has been subject to neglect, misuse, abuse, negligence or accident nor which has had the serial number altered, effaced, or removed. Neither shall this warranty apply to any instrument which has been connected otherwise than in accordance with instructions furnished by us.

This warranty is expressly in lieu of all other warranties, express or implied, and of all other obligations or liability on our part, and we neither assume nor authorize any representative or other person to assume for us any other liability in connection with the sale of this instrument.

STEREOPHONIC INSTALLATION PROCEDURE

Ventilation:

The Model TP200 is well ventilated in itself, but sufficient space must be allowed around it to permit proper air flow. Install the tuner in a manner to allow for unrestricted circulation. Do not place books or other objects on the cage or in the immediate vicinity of the instrument. Reducing the air flow will result in sharply reduced component and tube life.

Power Requirements:

Plug the AC cord into any outlet furnishing 117 volts, 50 or 60 cycle, AC current. The voltage may vary between 105 and 125 volts. Three AC receptacles are located on the rear panel and are controlled by the on/off switch.

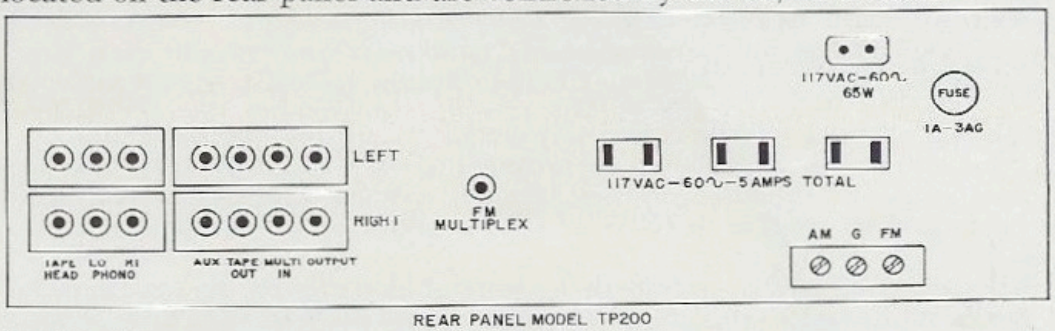

REAR PANEL MODEL TP200

Audio Output:

Two OUTPUT jacks are located on the rear of the chassis. Connect a shielded wire to the RIGHT OUTPUT jack and attach the other end of this lead to the input of your right power amplifier. Now connect a shielded wire to the LEFT OUTPUT jack and attach the other end of this lead to the input of your left power amplifier.

IMPORTANT: Connect the AC power cord on your amplifiers to the AC convenience outlets on the rear the TP200. The on/off switch on the TP200 will now control the power for all units.

Connecting Your Stereo Record Player:

A stereo cartridge uses two output connecting plugs. If you are using a low level magnetic cartridge, plug one output lead into the LEFT LO PHONO input jack located on the rear of the chassis and the other cartridge output lead into the RIGHT LO PHONO input jack.

Stereo crystal or ceramic cartridges may also be used with this amplifier. They must be plugged into the LEFT and RIGHT HI PHONO input jacks.

Connecting Your Stereo Tape Player:

A stereo tape deck utilizes two playback heads. Each head has its own output plug. Connect one plug to the LEFT TAPE HEAD input jack and the other plug to the RIGHT TAPE HEAD jack. These jacks are located on the left portion of the rear panel.

Connecting Your Stereo Tape Recorder:

Since most stereo tape recorders have their own preamplifiers, it is not desirable to plug the output of the recorder into the TAPE HEAD input jacks. This might cause overloading of the input stage. Connect one of the output plugs of your recorder into the LEFT AUX jack and the other output plug into the RIGHT AUX jack located on the rear panel of this instrument.

Connecting Your Tape Recorder to Make a Recording:

Provision is made on your Model TF200 to permit the recording of any program material. Connect the left input of your stereo tape recorder to the receptacle marked LEFT TAPE OUT and the right input of your stereo tape recorder to the receptacle marked RIGHT TAPE OUT. To connect a *monaural* tape recorder, connect its input to either LEFT or RIGHT TAPE OUT receptacle. If the program source you desire to record is plugged into the left preamplifier channel, use the LEFT TAPE OUT jack, and if it is plugged into the right preamplifier channel, use the RIGHT TAPE OUT jack. This will enable you to make a recording with the proper recording equalization as determined by your recorder, while simultaneously monitoring the program with the proper tone control, contour and loudness setting.

Connecting for FM Multiplex:

In those localities where FM multiplex broadcasting is available, attach your multiplex adapter to the jack on the rear of the TP200 marked FM MULTIPLEX. Follow the instructions supplied with your adapter for additional hookup information.

Connecting the FM Antenna:

Due to the high FM sensitivity of the TP200, the 48″ piece of wire supplied with the set will be sufficient antenna for all but the most difficult locations. One end of this wire should be fastened to the FM terminal on the Antenna Terminal Strip, and the other end left free and extended as may be convenient. It may be tacked or stapled to the rear of the bookcase or equipment cabinet, if necessary.

If an outdoor antenna is needed, use a folded dipole or Yagi, cut for the FM band. While a TV antenna is at times acceptable, for the best possible reception an FM antenna should be used. Attach the 300 ohm lead in wire to terminals FM and G on the rear of the instrument.

Connecting the AM Antenna:

The ferrite loopstick built into the TP200 comprises all the antenna required for good signal areas. In more remote locations an additional outdoor antenna may be required. This should consist of a single wire, as long as is reasonably practical. It must be kept away from large metal objects, power lines or electrical machinery to insure reception without extraneous noise.

Connect one end of the outdoor antenna wire to the rear Antenna Terminal marked AM.

OPERATING THE MODEL TP200 AS A STEREOPHONIC PREAMPLIFIER AND TUNER.

Every control on a well designed and honestly considered high fidelity instrument has a specific useful function related to each of the other controls. A brief explanatory note on the relationship of the various front panel controls will doubtless prove useful in organizing and clarifying them for you.

The Model TP200 incorporates the following front panel controls. Viewing the instrument from left to right you will note the FM TUNING control, TREBLE control (on/off switch is incorporated in this control), BASS control, LOUDNESS control, BALANCE control, MODE switch, FUNCTION SELECTOR switch and AM TUNING control. On the upper left section of the front panel you will note a CONTOUR switch and a SCRATCH FILTER switch. On the upper right section there is an EQUALIZATION switch and a RUMBLE FILTER switch.

TECHNICAL EXPLANATION OF THE CONTROLS

Since a stereo preamplifier is actually two preamplifiers in one, the number of operating controls would normally be doubled. This would make operation unnecessarily cumbersome. For convenience the duplicate controls are mechanically tied together, or ganged, to be operated by one knob.

Bass and Treble:

The BASS and TREBLE controls on the Model TP200 provide the full range of tonal adjustment necessary for high fidelity listening. These controls can either boost or cut the bass and treble tones of the stereo system. The controls should be set in accordance with your hearing preference, speaker characteristics and room acoustics.

Loudness Control:

This control adjusts the volume level of any program material fed into your stereo system. Its effect can be modified by the CONTOUR switch.

Contour Switch:

One of the limitations of human hearing is its tendency to lose sensitivity to the very low pitched sounds, as the program sound level is reduced. It is this characteristic (known as the Fletcher-Munson effect) which causes one to play music programs at high listening level in order to experience the full rich tone available from fine modern recordings. The Harman-Kardon CONTOUR switch compensates for the Fletcher-Munson effect thus eliminating high listening levels as a requisite for full enjoyment of reproduced music.

For low level listening throw the CONTOUR switch located on the front panel to the "ON" position. You will note how the low frequencies become more apparent while the volume level remains unchanged.

Balance Control:

The nature of stereo reproduction is such that it requires two identical channels to attain the highest degree of faithfulness and spatial distribution. Any variation in the efficiency of one channel as compared to the other will disturb this relationship. Since there may be slight differences between the two speakers, tape heads, etc., the TP200 includes a control to balance one channel against the other. Sufficient range is covered by this control to permit rebalancing of the overall system even in cases where major unbalance exists. It is entirely to be expected that this control will be set anywhere within its range to attain system balance.

When the BALANCE control is properly set, the apparent sound source will lie in a broad area between the two speakers. When the BALANCE control is rotated to the right the sound will move to the right and when the control is rotated to the left, the sound will move to the left.

Mode Switch:

The MODE switch selects between stereo operation, where a stereo program source is available, and monaural operation utilizing the full power of both channels and both speakers when the program source is monaural only.

This switch has five positions, REVERSE, STEREO, MON, RIGHT and LEFT. REVERSE interchanges the channels so that the program source appearing at the left speaker now appears at the right and the program source appearing at the right speaker reverses to the left. STEREO enables the speakers to operate in the manner in which they are normally connected. When you desire to play a monaural record utilizing your stereo cartridge, the MODE switch should be set to MON. This combines the left and right channel for optimum performance. RIGHT and LEFT can be used for stereo as well as for monaural operation. Setting the MODE switch to RIGHT when the amplifier is connected for stereo reproduction allows any program material being fed into the right stereo inputs to be reproduced by both speakers simultaneously. If the program source is stereo then only the right channel of the program will be heard through both speakers. Setting the MODE switch to LEFT allows all program material being fed into the left stereo inputs to be reproduced by both speakers simultaneously. If the program source is stereo then only the left channel of the program will be heard through both speakers.

Function Selector Switch:

The FUNCTION SELECTOR switch selects the desired type of program source and has 8 switching positions. AUX selects any device plugged into the two rear auxiliary input jacks. AM selects the AM tuner for operation; FM selects the FM tuner for operation; FM-AFC selects FM, but with the addition of an automatic frequency control circuit; AM-FM selects both AM and FM tuners for simultaneous stereo operation. FM MULTIPLEX activates the FM-Multiplex jacks on the rear for multiplex reception. PHONO selects your stereo phonograph and TAPE HD selects your stereo playback tape deck.

Rumble Filter:

At times, record changers, records and even some turntables produce an objectionable low frequency signal that is strong enough to be introduced into the sensitive playback system. Known as "Rumble" this undesirable signal can be eliminated by the special RUMBLE FILTER switch incorporated in the Model TP200. Whenever rumble is encountered, set the switch to "ON".

Equalization Switch:

Records and tapes are recorded with special emphasis and deemphasis of certain frequencies in order to achieve maximum dynamic range. To play back your records and tapes faithfully, it is necessary to "equalize" their frequency response.

When playing your stereophonic records set the EQUALIZATION switch to the RIAA position. It is not necessary to use the EUR position since all stereophonic recordings are recorded only with the RIAA equalization curve.

When you are using your tape deck through the TAPE HEAD input jacks, set the EQUALIZATION switch to either 3¾ or 7½ depending on the tape speed used. Proper playback equalization is then automatically selected.

Scratch Filter:

Whenever annoying record scratch is present, throw the SCRATCH FILTER switch to "ON".

AM and FM Tuning Controls:

These controls operate in the conventional manner. Merely turn the controls until you have tuned in the desired AM or FM station.

For AM/FM stereophonic reproduction it is necessary to separately tune the FM and AM stations. To facilitate this, set the FUNCTION SELECTOR switch to FM and carefully tune to the desired station. Now set the FUNCTION SELECTOR switch to AM and tune to the same program on AM. After carefully tuning the FM and AM bands, set the FUNCTION SELECTOR switch to AM-FM and adjust the BALANCE control for proper sound distribution from the two speakers.

FM-AFC:

FM broadcasting, by its very nature, eliminates almost all natural and man-made static. However, the characteristics of FM which makes this possible also causes problems in tuning. The TP200 incorporates a special electronic circuit known as Automatic Frequency Control that overcomes these problems and insures proper tuning even if the manual tuning is not accurately done. Therefore AFC always keeps the station in the center of the channel and eliminates distortion caused by inaccurate tuning.

In order to take maximum advantage of the benefits of AFC, it is suggested that fine tuning be done with the Function Switch in the FM position. When the switch is then turned to the FM-AFC position the AFC will improve this careful tuning by a factor of 10 to 1. This procedure is especially recommended when a weak station is being tuned on a channel adjacent to a stronger one. This will prevent the AFC from reaching for the more powerful signal and skipping over the weaker one. If the weaker station is tuned in without the AFC, when the AFC is applied it will lock it in permanently.

Indexing the Stations:

Station Index Pins are supplied with this tuner in order to facilitate station identification. These may be used for monaural or stereo operation.

Tune to your favorite FM and AM stations and insert an Index Pin at the exact spot where each station comes in. The pin inserts directly into the cushion located in front of the dial glass.

You will note the pins come in various colors for easy identification. Use pins of the same color for the AM and FM locations of the same station. This will help you tune to your favorite stations without unnecessary program searching.

ADDITIONAL INFORMATION

How To Play A Monaural LP Record:

If you have been playing stereo records, merely remove the stereo record and put on a monaural record. It's as simple as that! All stereo record players and phonographs using quality stereo cartridges are completely compatible with monaural LP records. LP's and stereos may be intermixed on any good stereo record changer.

MONAURAL INSTALLATION OF THE MODEL TP200.

INSTALLATION PROCEDURE

Ventilation:

The unit is well ventilated in itself, but sufficient space must be allowed around it to permit proper air flow. Install the amplifier in a manner to allow for unrestricted circulation. Do not place books or other objects on the cage or in the immediate vicinity of the instrument. Reducing the air flow will result in sharply reduced component and tube life.

Power Requirements:

Plug the AC cord into any outlet furnishing 117 volts 50 or 60 cycle AC current. The voltage may vary between 105 and 125 volts. Three AC convenience outlets are located on the rear of the instrument, and are controlled by the on/off switch.

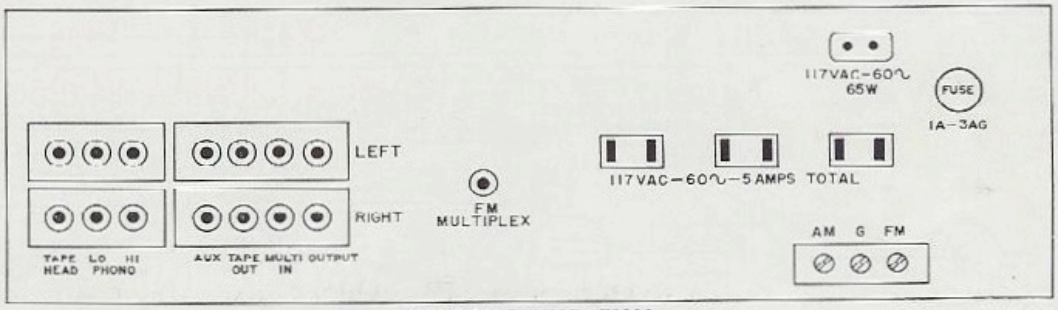

REAR PANEL MODEL TP200

Audio Output:

Two OUTPUT jacks are located on the rear of the chassis. Connect a shielded wire to either the Right or Left OUTPUT jack and attach the other end of this lead to the input jack on your power amplifier.

IMPORTANT: Connect the AC power cord on your monaural amplifier to one of the AC convenience outlets on the rear of the TP200. The on/off switch on the TP200 will now control the power for both units.

Connecting Your Record Player:

Any type of record player may be used with this amplifier. If your player uses a low level magnetic cartridge plug it into either the LEFT or RIGHT LO PHONO input. If you are using a monaural ceramic or crystal cartridge plug it into either the LEFT or RIGHT PHONO-HI input.

Connecting Your Tape Player:

Connect your monaural tape deck to either the Left or Right TAPE HEAD input jack.

Connecting Your Tape Recorder:

Since most monaural tape recorders have their own preamplifier, it is not desirable to plug the output of the recorder into the TAPE HEAD jack. This might cause overloading of the input stage. Connect the recorder output plug to either LEFT or RIGHT AUX jack on the rear panel.

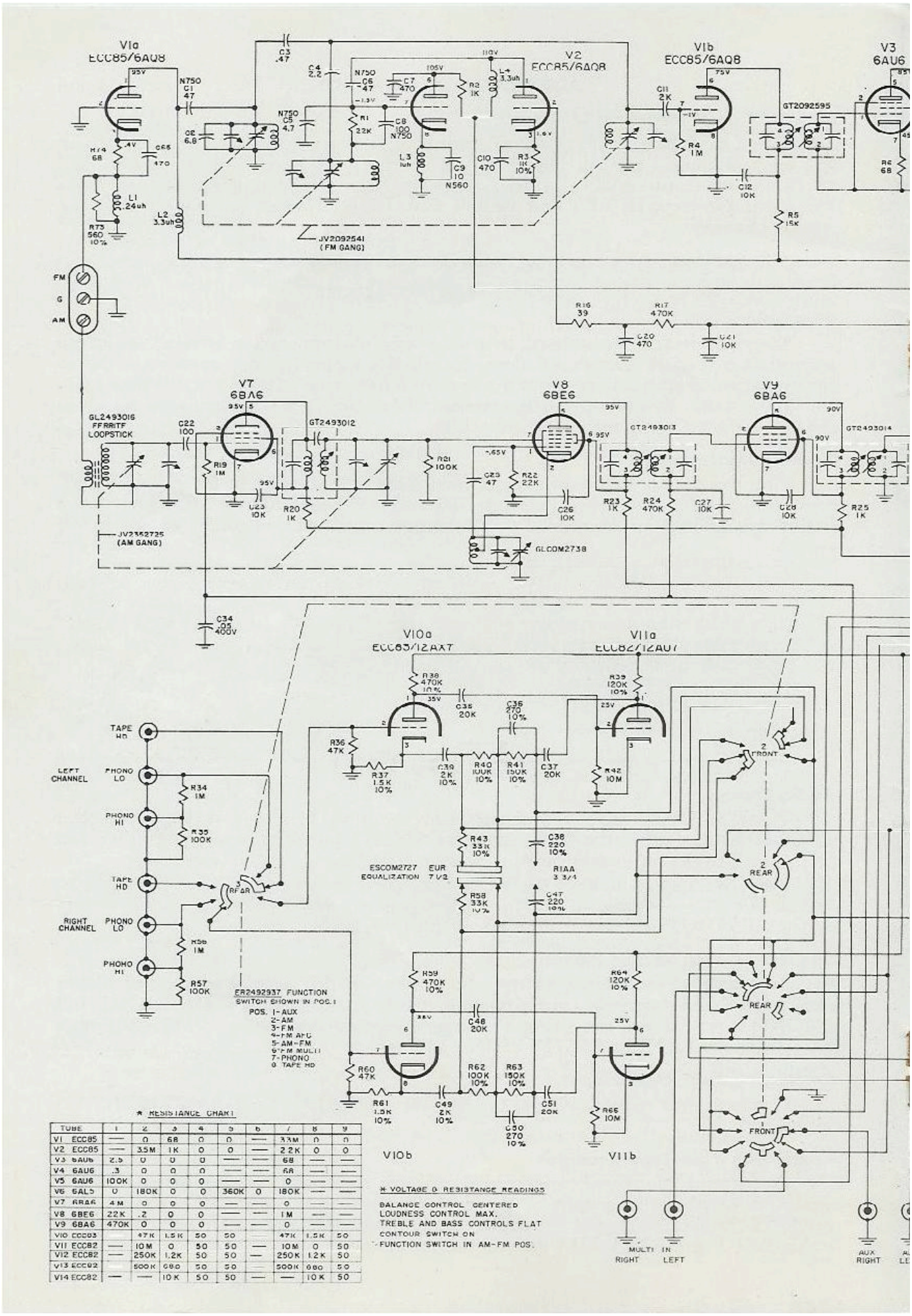

* RESISTANCE CHART

TUBE	1	2	3	4	5	6	7	8	9
V1 ECC85	—	0	68	0	0	—	33M	0	0
V2 ECC85	—	3.5M	1K	0	0	—	2.2K	0	0
V3 6AU6	2.5	0	0	0	—	—	68	—	—
V4 6AU6	.3	0	0	0	—	—	68	—	—
V5 6AU6	100K	0	0	0	—	—	0	—	—
V6 6AL5	0	180K	0	0	360K	0	180K	—	—
V7 6BA6	4M	0	0	0	—	—	0	—	—
V8 6BE6	22K	.2	0	0	—	—	1M	—	—
V9 6BA6	470K	0	0	0	—	—	0	—	—
V10 ECC83		47K	1.5K	50	50		47K	1.5K	50
V11 ECC82	—	10M	0	50	50	—	10M	0	50
V12 ECC82	—	250K	1.2K	50	50	—	250K	1.2K	50
V13 ECC82		500K	680	50	50		500K	680	50
V14 ECC82	—	—	10K	50	50	—	—	10K	50

* VOLTAGE & RESISTANCE READINGS

BALANCE CONTROL CENTERED
LOUDNESS CONTROL MAX.
TREBLE AND BASS CONTROLS FLAT
CONTOUR SWITCH ON
FUNCTION SWITCH IN AM-FM POS.

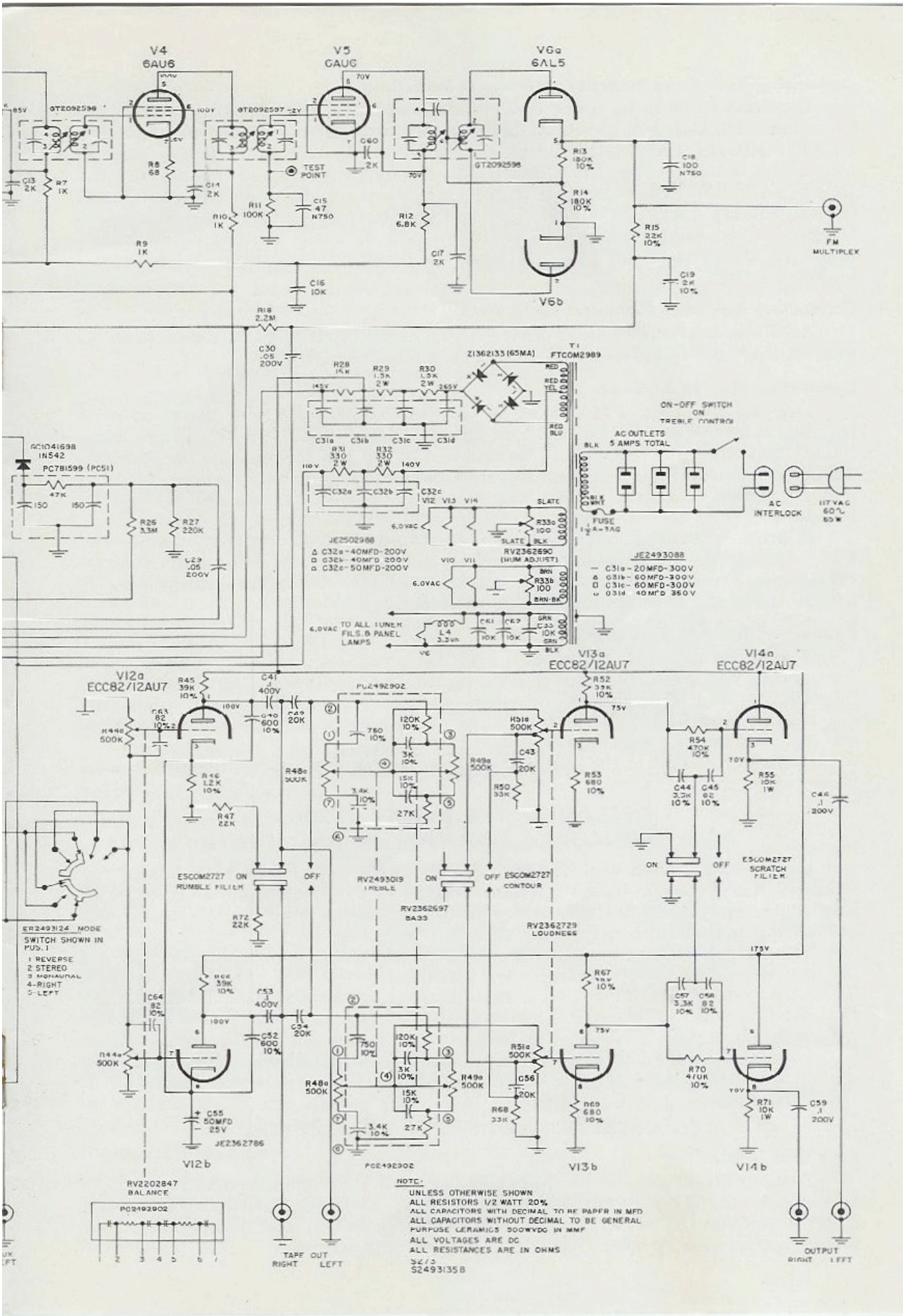
V4
6AU6
V5
6AU6
V6a
6AL5
V6b
GT2092598
GT2092597
TEST POINT
R8 68
R7 1K
C13 2K
C14 2K
R10 1K
R11 100K
C15 47 N750
R9 1K
C16 10K
C60 2K
R12 6.8K
C17 2K
R13 180K 10%
R14 180K 10%
C18 100 N750
R15 22K 10%
C19 2K 10%
FM MULTIPLEX
R18 2.2M
C30 .05 200V
Z1362133 (65MA)
T1 FTCOM2989
R28 14K
R29 1.5K 2W
R30 1.5K 2W
C31a C31b C31c C31d
R31 330 2W
R32 330 2W
C32a C32b C32c
AC1041698 IN542
PC781599 (PC51)
R25 3.3M
R27 220K
C29 .05 200V
JE2502988
Δ C32a-40MFD-200V
□ C32b-40MFD-200V
□ C32c-50MFD-200V
RV2362690 (HUM ADJUST)
R33a 100
R33b 100
6.0VAC
TO ALL TUNER FILS. & PANEL LAMPS
L4 3.3uh
C35 10K
ON-OFF SWITCH ON TREBLE CONTROL
AC OUTLETS 5 AMPS TOTAL
FUSE
AC INTERLOCK
117 VAC 60~ 65W
JE2493088
— C31a-20MFD-300V
Δ C31b-60MFD-300V
□ C31c-60MFD-300V
C31d 40MFD 350V
V12a ECC82/12AU7
V13a ECC82/12AU7
V14a ECC82/12AU7
R45 39K 10%
C41 1 400V
C49 20K
C40 600 10%
R44a 500K
C63 82 10%
R46 1.2K 10%
R47 22K
R48a 500K
PC2492902
120K 10%
3K 10%
15K 10%
27K
750 10%
3.4K 10%
R49a 500K
R50 33K
C43 20K
R51a 500K
R52 39K 10%
R53 680 10%
R54 470K 10%
C44 3.3K 10%
C45 82 10%
R55 10K 1W
C46 .1 200V
ESCOM2727 RUMBLE FILTER
ON
OFF
RV2493019 TREBLE
RV2362697 BASS
ESCOM2727 CONTOUR
ESCOM2727 SCRATCH FILTER
R72 22K
RV2362729 LOUDNESS
ER2493124 MODE SWITCH SHOWN IN POS. 1
1 REVERSE
2 STEREO
3 MONAURAL
4-RIGHT
5-LEFT
R66 39K 10%
C64 82 10%
C53 1 400V
C54 20K
C52 600 10%
R44a 500K
C55 50MFD 25V
JE2362786
R67 10K 10%
C57 3.3K 10%
C58 82 10%
R70 470K 10%
R71 10K 1W
C59 .1 200V
V12b
V13b
V14b
RV2202847 BALANCE
PC2492902
AUX LEFT
TAPE OUT RIGHT LEFT
OUTPUT RIGHT LEFT
NOTE:
UNLESS OTHERWISE SHOWN
ALL RESISTORS 1/2 WATT 20%
ALL CAPACITORS WITH DECIMAL TO BE PAPER IN MFD
ALL CAPACITORS WITHOUT DECIMAL TO BE GENERAL PURPOSE CERAMICS 500WVDC IN MMF
ALL VOLTAGES ARE DC
ALL RESISTANCES ARE IN OHMS
S2493135B

Connecting Your Tape Recorder To Make A Recording:

Provision is made on your Model TP200 to permit the recording of any program material. Connect the input of your monaural tape recorder to either the LEFT or RIGHT TAPE OUT receptacle located on the rear panel. If the program source you desire to record is plugged into the left preamplifier channel, use the LEFT TAPE OUT jack and if it is plugged into the right preamplifier channel, use the RIGHT TAPE OUT jack. This will enable you to make a recording with the proper recording equalization as determined by your recorder, while simultaneously monitoring the program with the proper tone control, contour and loudness setting.

Connecting Auxiliary Monaural Equipment:

A TV tuner or other similar device with a high output level may be connected to either the LEFT or RIGHT AUX jack on the rear panel.

Connecting the FM Antenna:

Due to the high FM sensitivity of the TP200, the 48″ piece of wire supplied with the set will be sufficient antenna for all but the most difficult locations. One end of this wire should be fastened to the FM terminal on the Antenna Terminal Strip, and the other end left free and extended as may be convenient. It may be tacked or stapled to the rear of the bookcase or equipment cabinet, if necessary.

If an outdoor antenna is needed, use a folded dipole or Yagi, cut for the FM band. While a TV antenna is at times acceptable, for the best possible reception an FM antenna should be used. Attach the 300 ohm lead-in wire to terminals FM and G on the rear of the instrument.

Connecting the AM Antenna:

The ferrite loopstick built into the TP200 comprises all the antenna required for good signal areas. In more remote locations an additional outdoor antenna may be required. This should consist of a single wire, as long as is reasonably practical. It must be kept away from large metal objects, power lines or electrical machinery to insure reception without extraneous noise.

Connect one end of the outdoor antenna wire to the rear Antenna Terminal marked AM.

OPERATING THE MODEL TP200 AS A MONAURAL PREAMPLIFIER AND TUNER

Every control on a well designed and honestly considered high fidelity instrument has a specific useful function, related to each of the other controls. A brief explanatory note on the relationship of the various front panel controls will doubtless prove useful in organizing and clarifying them for you.

The Model TP200 incorporates the following front panel controls. Viewing the instrument from left to right you will note the FM TUNING control, TREBLE control (on/off switch is incorporated in this control), BASS control, LOUDNESS control, BALANCE control, MODE switch, FUNCTION SELECTOR switch and AM TUNING control. On the upper left section of the front panel you will note a CONTOUR switch and a SCRATCH FILTER switch. On the upper right section there is an EQUALIZATION switch and a RUMBLE FILTER switch.

TECHNICAL EXPLANATION OF THE CONTROLS

Bass and Treble:

These controls provide the full range of tonal adjustment necessary for high fidelity listening. These controls can either boost or cut the bass and treble tones of your monaural system. The controls should be set in accordance with your hearing preference, speaker characteristics and room acoustics.

Loudness Control:

This control adjusts the volume level of any program material fed into your high fidelity system. Its effect can be modified by the CONTOUR Switch.

Contour Switch:

One of the limitations of human hearing is its tendency to lose sensitivity to the very low pitched sounds, as the program sound level is reduced. It is this characteristic (known as the Fletcher-Munson effect) which causes one to play music programs at high listening level in order to experience the full rich tone available from fine modern recordings. The Harman-Kardon CONTOUR Switch compensates for the Fletcher-Munson effect, thus eliminating high listening levels as a requisite for full enjoyment of reproduced music.

For low level listening throw the CONTOUR Switch located on the front panel to the "ON" position. You will note how the low frequencies become more apparent while the volume level remains unchanged.

Balance Control:

This control has no function in monaural listening and should be left in the center position. If rotated to either extreme position, it would completely shut off the preamplifier on that side.

Mode Switch:

The MODE switch has three positions for monaural operation. When playing monaural records with a stereo cartridge the MODE switch must be set to MON. This combines the left and right channels for optimum performance. RIGHT and LEFT selects between the two preamplifiers. If your monaural cartridge is connected to the left phono input, then the MODE switch must be set to LEFT position to activate the left preamplifier. By using the MODE switch to select between RIGHT and LEFT preamplifiers this allows for twice the usual number of input jacks found on ordinary monaural amplifiers.

STEREO and RIGHT positions are identically connected and will activate the Right preamplifier. REVERSE and LEFT are identically connected and will activate the Left preamplifier.

For simplicity, it is suggested to use only the RIGHT and LEFT positions on the MODE switch for monaural operation. Switch to RIGHT or LEFT as a function of the preamplifier you wish to use.

Function Selector Switch:

The FUNCTION SELECTOR switch selects the desired type of program source and has 8 positions. AUX selects any monaural device plugged into either of the rear auxiliary inputs. AM selects the AM tuner for operation; FM selects the FM Tuner; FM-AFC selects FM, but with the addition of an automatic frequency control circuit. The AM-FM position in monaural operation will enable you to listen only to FM. The FM-MULTIPLEX position will be inoperative for monaural. PHONO selects your monaural phonograph and TAPE HD selects your monaural tape deck.

Rumble Filter:

At times, record changers, records and even some turntables produce an objectionable low frequency signal that is strong enough to be introduced into the sensitive playback system. Known as "Rumble", this undesirable signal can be eliminated by the special RUMBLE FILTER switch incorporated in the Model TP200. Whenever rumble is encountered, set the switch to "ON".

Equalization Switch:

Records and tapes are recorded with special emphasis and deemphasis of certain frequencies in order to achieve maximum dynamic range. To play back your records and tapes faithfully, it is necessary to "equalize" their frequency response.

When playing your monaural records set the EQUALIZATION switch to the RIAA or EUR position depending on the recommendation of the record company. If you are in doubt as to the proper equalization setting, set the switch for best listening quality.

When you are using your monaural tape deck through the TAPE HEAD input jack, set the equalization switch to either 3¾ or 7½ depending on the tape speed used. Proper playback equalization is then automatically selected.

Scratch Filter:

Whenever annoying record scratch is present, throw the SCRATCH FILTER to "on".

AM and FM Tuning Controls:

These controls operate in the conventional manner. Merely turn the controls until you have tuned in the desired AM or FM station.

FM-AFC:

FM broadcasting, by its very nature, eliminates almost all natural and man-made static. However, the characteristics of FM which makes this possible also causes problems in tuning. The TP200 incorporates a special electronic circuit known as Automatic Frequency Control that overcomes these problems and insures proper tuning even if the manual tuning is not accurately done. Therefore AFC always keeps the station in the center of the channel and eliminates distortion caused by inaccurate tuning.

In order to take maximum advantage of the benefits of AFC, it is suggested that fine tuning be done with the FUNCTION Switch in the FM position. When the switch is then turned to the FM-AFC position the AFC will improve this careful tuning by a factor of 10 to 1. This procedure is especially recommended when a weak station is being tuned on a channel adjacent to a stronger one. This will prevent the AFC from reaching for the more powerful signal and skipping over the weaker one. If the weaker station is tuned in without the AFC, when the AFC is applied it will lock it in permanently.

Indexing the Stations:

Station Index Pins are supplied with this tuner in order to facilitate station identification. These may be used for monaural or stereo operation.

Tune to your favorite FM and AM stations and insert an Index Pin at the exact spot where each station comes in. The pin inserts directly into the cushion located in front of the dial glass.

You will note the pins come in various colors for easy identification. Use pins of the same color for the AM and FM locations of the same station. This will help you tune to your favorite stations without unnecessary program searching.

ADJUSTMENTS

Hum Adjustment:

Two hum adjustment controls are located at the rear of the AM tuning gang and are accessible from the top or bottom of the chassis. The cage must be removed to make the adjustment from above.

These controls adjust the low and high level hum on the TP200. Each operates simultaneously to adjust both left and right channels. To adjust for minimum hum, set the FUNCTION SELECTOR switch to AUX. Disconnect the cable of any device connected to the AUX input and then turn the LOUDNESS control full on. While listening to either speaker, adjust the HIGH LEVEL hum control for minimum hum. Now set the FUNCTION SELECTOR switch to the PHONO position and set the LOW LEVEL hum control for minimum hum.

System Hum or Noise:

In any high fidelity installation, hum may be caused by the interconnection of a record changer, tuner and amplifier, as a result of the cables and different grounds. A good way to eliminate this problem is to first disconnect everything but the speakers from the amplifier, and listed for hum. If the hum persists, make the hum adjustments described above. Try reversing the TP200 power plug. Now plug in the record player. If hum appears, try reversing the record player power plug, and try connecting a wire from the record player chassis to the amplifier chassis. In this way, connect the tuner, tape deck and other devices in turn.

Note that hum may be picked up by defective interconnecting cables, and by interconnecting cables running too close to power cables.

MAINTENANCE AND REPAIRS

Fuse:

In the event of a potentially damaging failure of tubes or components, the Model TP200 is protected by a 1 ampere, type 3AG fuse, located on the rear of the unit. If this fuse is blown, it should be replaced only with one of the same rating. Replacing with a fuse of higher rating will not protect the amplifier, and may result in severe damage, which will not be covered by the factory warranty.

Routine Maintenance:

Due to the conservative design and high quality components of the Model TP200, no routine maintenance other than yearly tube checking is advised. Occasional resetting of the hum adjustments will keep the unit operating at peak efficiency.

Repair:

Only the most qualified service technician should be employed, as special equipment and training is required to properly service a high fidelity instrument. This manual contains information of great value to the repairman, and should be kept available.

Factory Warranty Stations are maintained in most major cities. For the address of the nearest one, or for any other information relating to your Harman-Kardon products, write to the attention of the Customer Service Department, Harman-Kardon, Inc., 520 Main St., Westbury, N. Y. Be sure to include the model and serial number of the set in question. A short description of your complete installation is often of help in answering your questions.

SERVICE NOTES

Servicing printed wiring is a relatively simple matter and is no more complicated than servicing conventionally wired circuits. No special tools or skills are required and if you follow the outlined procedure, a repair can be easily made.

Avoid damage to the copper foil. Remove components carefully. If the copper is damaged, the broken spot may be jumped with a small piece of wire or bridged with molten solder.

Avoid damage to the printed board. Do not press the board, especially when changing tubes. The board is sturdy in construction, but may break if proper care is not taken when servicing.

Avoid excessive solder deposits. In some areas on the board, wiring is closely spaced. Be careful not to bridge two leads with excessive solder. This may cause a short or intermittent trouble.

Avoid overheating. Use an iron rated at 35 watts or less and do not hold the iron to the connection for a longer period of time than necessary.

Tools and materials required: low wattage iron, small wire brush, 60% tin — 40% lead low temperature solder-rosin core, thin bladed knife and a small pick or soldering aid.

SPECIFICATIONS

FM

Sensitivity:	5 μv (30 db quicting) 2.5 μv (20 db quicting)
Selectivity:	240 KC Bandwidth: 6 db down.
Discriminator Peak to Peak	0.6 megacycles.
Frequency Range:	88-108 M.C.
Drift:	±5 KC Maximum.
Image Rejection:	40 db.
IF Rejection:	60 db.
Antenna Input:	300 ohms.
Distortion:	Less than 0.5% IM at 30% modulation.
	Less than 3% IM at 100% modulation.
Frequency Response:	±0.75 db 30-15,000 c.p.s. including de-emphasis.
Hum Level:	60 db below 100% modulation.
Radiation:	Within FCC requirements.

AM

Sensitivity:	80 μv per meter. Terminal sensitivity 10 μv.
Selectivity:	10 KC Bandwidth: 6 db down.
Frequency Range:	530-1640 KC.
Image Rejection:	55 db.
IF Rejection:	55 db.
Hum Level:	55 db below 80% modulation.
Frequency Response:	±3 db. 20-5,000 c.p.s.

Audio

Frequency Response:	±0.5 db 15-30,000 c.p.s.
Distortion:	Less than 0.2% harmonic & IM at 2 Volt R.M.S.
Cross Talk:	50 db.
Tone Control Range:	±12 db 50 and 10,000 c.p.s.
Output Level:	1.5 Volt from cathode follower.

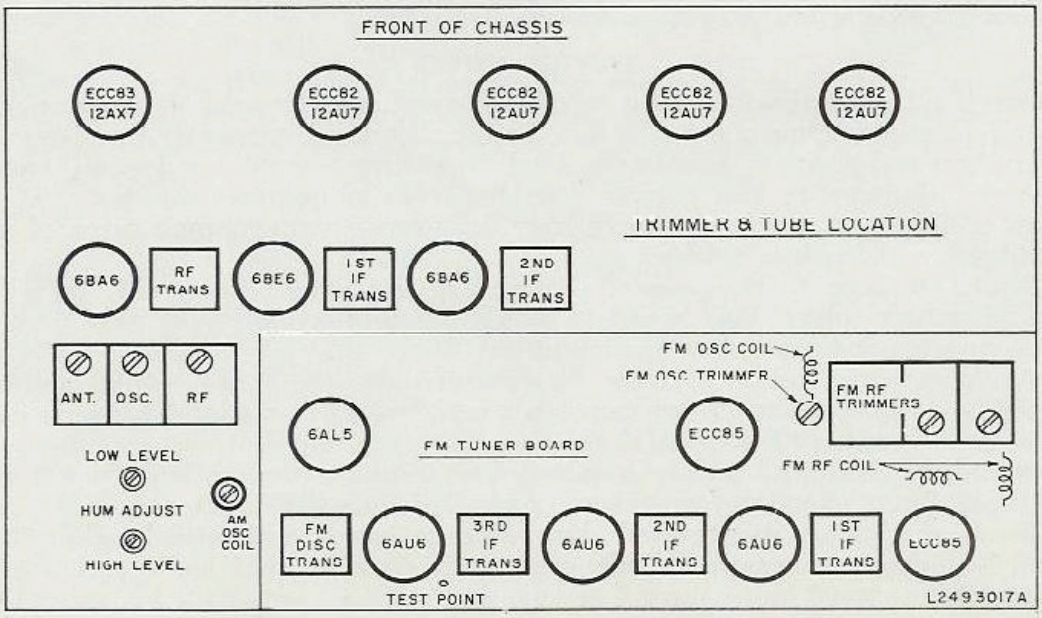

LIST OF REPLACEABLE PARTS

H-K Part No.	Description	List Price
ESCOM2727	SWITCH, SLIDE	.40
RV2493019	CONTROL, TREBLE	3.55
RV2362697	CONTROL, BASS	2.80
RV2362729	CONTROL, LOUDNESS	2.25
RV2202847	CONTROL, BALANCE	2.25
ER2493124	SWITCH, MODE	1.25
ER2492937	SWITCH, FUNCTION	4.00
FTCOM2989	TRANSFORMER, POWER	14.00
Z1362133	RECT. SEL 65 MA	1.75
RV2362690	TWIN POT 100 OHMS	1.30
GLCOM3011	AM. OSCILLATOR COIL	.60
JE2493088	CAPACITOR ELECT. 40 MFD/350	3.95
JE2502988	CAPACITOR ELECT. 50-40-40 MFD/200V	2.50
JV2352725	CAPACITOR, VARIABLE	4.25
GT2493013	TRANS. 1*st* IF CHASSIS MOUNT	1.50
GT2493014	TRANS. 2*nd* IF CHASSIS MOUNT	1.50
Z24614	TRANS. MTG CLIP—AUTO #1041	.05
P2492963	DIAL GLASS	1.00
P35944	DIAL GLASS CLIPS	.10
GL2493016	ANTENNA LOOPSTICK	2.00
P481329	RING, LOOPSTICK TUNING	.05
GT2493012	RF TRANSFORMER CHASSIS MOUNTING	2.50

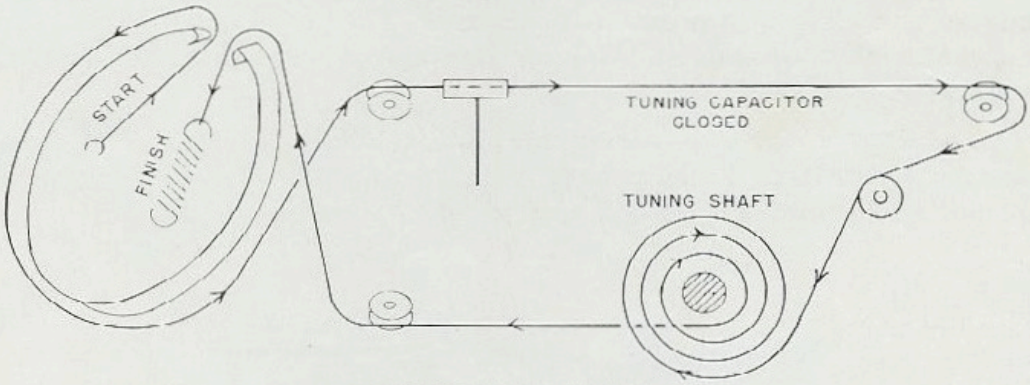

FM STRINGING DIAGRAM

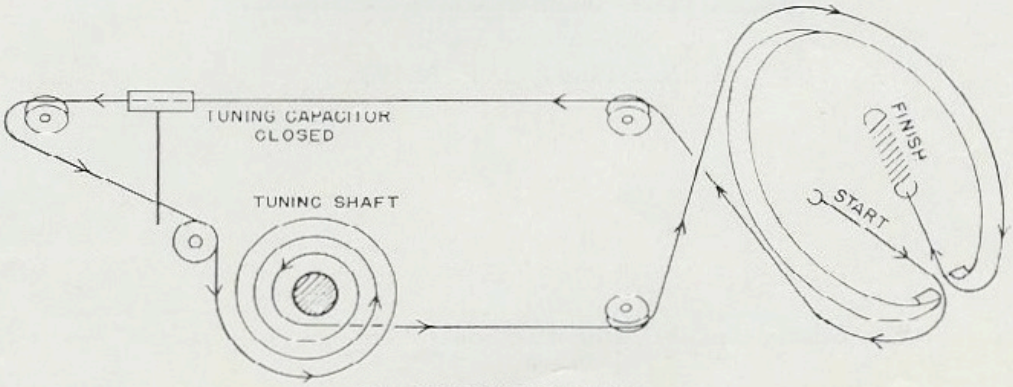

AM STRINGING DIAGRAM

ALIGNMENT PROCEDURE

FUNCTION SWITCH SETTING	SIGNAL GENERATOR FREQ.	SIGNAL GENERATOR MOD.	SIGNAL INPUT POINT	OUTPUT INDICATOR	CONNECT INDICATOR TO:	DIAL SETTING	ADJUST	OUTPUT INDICATION
FM	10.7 MC	300 KC FM 60 CPS	FM MIXER GANG	AC-VTVM OR SCOPE	TEST POINT		3 FM IF TRANS.	MAX GAIN & SYMMETRY
FM	10.7 MC	300 KC FM 60 CPS	FM MIXER GANG	AC-VTVM OR SCOPE	TUNER OUTPUT		DISCR. TRANS.	S PATTERN OF MAX GAIN & SYMM.
FM	106 MC	300 KC FM 60 CPS	FM ANT. TERMINAL	AC-VTVM OR SCOPE	TEST POINT	106 MC	106 MC OSC RF. MIXER TRIMMERS	MAXIMUM OUTPUT
FM	90 MC	300 KC FM 60 CPS	FM ANT. TERMINAL	AC-VTVM OR SCOPE	TEST POINT	90 MC	OSC. RF. MIXER COILS	MAXIMUM OUTPUT

FUNCTION SWITCH SETTING	SIGNAL GENERATOR FREQ.	SIGNAL GENERATOR MOD.	SIGNAL INPUT POINT	OUTPUT INDICATOR	CONNECT INDICATOR TO:	DIAL SETTING	ADJUST	OUTPUT INDICATION
AM	455 KC	30% AM	AM RF GANG	AC-VTVM OR SCOPE	TUNER OUTPUT	1600 KC	2 AM IF TRANS	MAXIMUM OUTPUT
AM	1400 KC	30% AM	AM ANT. TERM.	AC-VTVM OR SCOPE	TUNER OUTPUT	1400 KC	OSC, ANT & RF TRIMMERS	MAXIMUM OUTPUT
AM	600 KC	30% AM	AM ANT. TERM.	AC-VTVM OR SCOPE	TUNER OUTPUT	600 KC	OSC COIL LOOPSTICK & RF TRANS	MAXIMUM OUTPUT
AM	1400 KC				REPEAT STEP 2			

Harman-Kardon high fidelity instruments incorporate advanced production techniques as well as advanced circuit features. They reflect the highest state of the art of fine audio equipment. We hope your unit provides you with many hours of listening enjoyment.

Our Customer Service Department is maintained to answer your correspondence about High Fidelity and to make recommendation of appropriate companion accessories. Please feel free to write without obligation.

harman kardon

520 MAIN STREET
WESTBURY, L. I., N. Y.

harman kardon

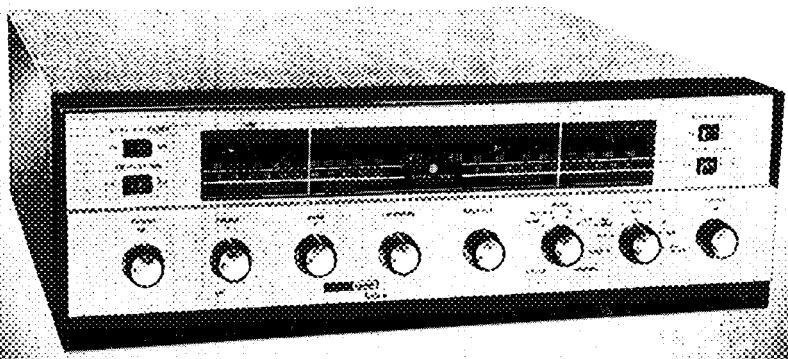

The Concerto

MODEL [illegible]

INSTRUCTION MANUAL

It is essential you read this instruction booklet carefully before installing your high fidelity system. You have invested in an extremely fine electronic instrument into which many excellent engineering developments have been incorporated, and each is important for the proper operation of your system. This booklet has been written in simple non-technical language and if you will take time to read it first before doing anything else, you will find it simple to obtain optimum performance from your Harman-Kardon instrument.

Be sure to keep this booklet available at all times. It contains indispensable technical and service information.

This is the Harman-Kardon Stereo Symbol. It is your assurance of superb stereo performance.

UNPACKING

After unpacking the Concerto, inspect it carefully for signs of transit damage. The unit was subjected to many inspections and tests prior to final packing, and it therefore should be in perfect condition. If damage is visible, notify your dealer at once. If the unit was shipped to you, notify the transportation company without delay.

Check the contents of the carton thoroughly and inspect the folds of the packing material before discarding it. Your package should contain the following items:

1 Concerto, Model TP200 Stereophonic AM & FM Tuner, Stereophonic Preamplifier.
1 Instruction Booklet
1 Warranty Card
1 Mounting Template.

WARRANTY POLICY

We urge you to completely fill in your warranty card and mail it to the factory without delay to protect your rights under warranty. The warranty cards are carefully filed for reference and should you require information on the use of this high fidelity unit, or repair service, we will be able to immediately identify your set and reply quickly.

NOTE: It is necessary to receive factory authorization before returning a set for warranty repair either to the factory or to an authorized station. Repairs are to be returned on an Express Prepaid basis. A letter describing the exact difficulty must be enclosed with the unit.

WARRANTY

We warrant each Model TP200 to be free from defects in material and workmanship under normal use and service, and in accordance with the conditions herein below set forth, for a period of 1 year from date of delivery to the original purchaser, and agree to replace or repair any part or parts, with the exception of tubes which are under the manufacturer's 90 day warranty, returned to us within said 1 year, with transportation prepaid and which our examination shall disclose to our satisfaction to have been thus defective. This warranty does not include free labor, nor is it applicable to any instrument which shall have been repaired or altered in any way so as in our judgment to affect its stability or reliability nor which has been subject to neglect, misuse, abuse, negligence or accident nor which has had the serial number altered, effaced, or removed. Neither shall this warranty apply to any instrument which has been connected otherwise than in accordance with instructions furnished by us.

This warranty is expressly in lieu of all other warranties, express or implied, and of all other obligations or liability on our part, and we neither assume nor authorize any representative or other person to assume for us any other liability in connection with the sale of this instrument.

STEREOPHONIC INSTALLATION PROCEDURE

Ventilation:

The Model TP200 is well ventilated in itself, but sufficient space must be allowed around it to permit proper air flow. Install the tuner in a manner to allow for unrestricted circulation. Do not place books or other objects on the cage or in the immediate vicinity of the instrument. Reducing the air flow will result in sharply reduced component and tube life.

Power Requirements:

Plug the AC cord into any outlet furnishing 117 volts, 50 or 60 cycle, AC current. The voltage may vary between 105 and 125 volts. Three AC receptacles are located on the rear panel and are controlled by the on/off switch.

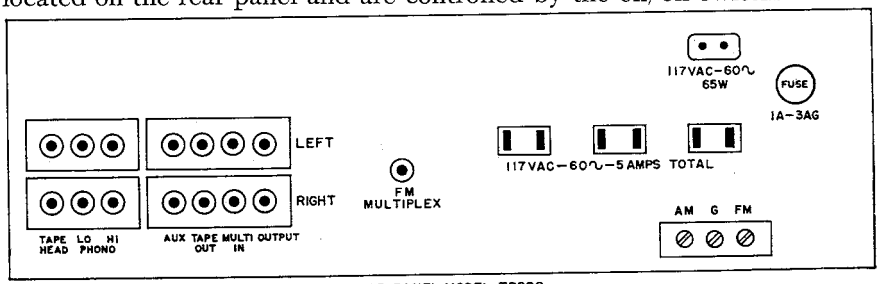

REAR PANEL MODEL TP200

Audio Output:

Two OUTPUT jacks are located on the rear of the chassis. Connect a shielded wire to the RIGHT OUTPUT jack and attach the other end of this lead to the input of your right power amplifier. Now connect a shielded wire to the LEFT OUTPUT jack and attach the other end of this lead to the input of your left power amplifier.

IMPORTANT: Connect the AC power cord on your amplifiers to the AC convenience outlets on the rear the TP200. The on/off switch on the TP200 will now control the power for all units.

Connecting Your Stereo Record Player:

A stereo cartridge uses two output connecting plugs. If you are using a low level magnetic cartridge, plug one output lead into the LEFT LO PHONO input jack located on the rear of the chassis and the other cartridge output lead into the RIGHT LO PHONO input jack.

Stereo crystal or ceramic cartridges may also be used with this amplifier. They must be plugged into the LEFT and RIGHT HI PHONO input jacks.

Connecting Your Stereo Tape Player:

A stereo tape deck utilizes two playback heads. Each head has its own output plug. Connect one plug to the LEFT TAPE HEAD input jack and the other plug to the RIGHT TAPE HEAD jack. These jacks are located on the left portion of the rear panel.

Connecting Your Stereo Tape Recorder:

Since most stereo tape recorders have their own preamplifiers, it is not desirable to plug the output of the recorder into the TAPE HEAD input jacks. This might cause overloading of the input stage. Connect one of the output plugs of your recorder into the LEFT AUX jack and the other output plug into the RIGHT AUX jack located on the rear panel of this instrument.

Connecting Your Tape Recorder to Make a Recording:

Provision is made on your Model TF200 to permit the recording of any program material. Connect the left input of your stereo tape recorder to the receptacle marked LEFT TAPE OUT and the right input of your stereo tape recorder to the receptacle marked RIGHT TAPE OUT. To connect a *monaural* tape recorder, connect its input to either LEFT or RIGHT TAPE OUT receptacle. If the program source you desire to record is plugged into the left preamplifier channel, use the LEFT TAPE OUT jack, and if it is plugged into the right preamplifier channel, use the RIGHT TAPE OUT jack. This will enable you to make a recording with the proper recording equalization as determined by your recorder, while simultaneously monitoring the program with the proper tone control, contour and loudness setting.

Connecting for FM Multiplex:

In those localities where FM multiplex broadcasting is available, attach your multiplex adapter to the jack on the rear of the TP200 marked FM MULTIPLEX. Follow the instructions supplied with your adapter for additional hookup information.

Connecting the FM Antenna:

Due to the high FM sensitivity of the TP200, the 48″ piece of wire supplied with the set will be sufficient antenna for all but the most difficult locations. One end of this wire should be fastened to the FM terminal on the Antenna Terminal Strip, and the other end left free and extended as may be convenient. It may be tacked or stapled to the rear of the bookcase or equipment cabinet, if necessary.

If an outdoor antenna is needed, use a folded dipole or Yagi, cut for the FM band. While a TV antenna is at times acceptable, for the best possible reception an FM antenna should be used. Attach the 300 ohm lead-in wire to terminals FM and G on the rear of the instrument.

Connecting the AM Antenna:

The ferrite loopstick built into the TP200 comprises all the antenna required for good signal areas. In more remote locations an additional outdoor antenna may be required. This should consist of a single wire, as long as is reasonably practical. It must be kept away from large metal objects, power lines or electrical machinery to insure reception without extraneous noise.

Connect one end of the outdoor antenna wire to the rear Antenna Terminal marked AM.

OPERATING THE MODEL TP200 AS A STEREOPHONIC PREAMPLIFIER AND TUNER.

Every control on a well designed and honestly considered high fidelity instrument has a specific useful function related to each of the other controls. A brief explanatory note on the relationship of the various front panel controls will doubtless prove useful in organizing and clarifying them for you.

The Model TP200 incorporates the following front panel controls. Viewing the instrument from left to right you will note the FM TUNING control, TREBLE control (on/off switch is incorporated in this control), BASS control, LOUDNESS control, BALANCE control, MODE switch, FUNCTION SELECTOR switch and AM TUNING control. On the upper left section of the front panel you will note a CONTOUR switch and a SCRATCH FILTER switch. On the upper right section there is an EQUALIZATION switch and a RUMBLE FILTER switch.

TECHNICAL EXPLANATION OF THE CONTROLS

Since a stereo preamplifier is actually two preamplifiers in one, the number of operating controls would normally be doubled. This would make operation unnecessarily cumbersome. For convenience the duplicate controls are mechanically tied together, or ganged, to be operated by one knob.

Bass and Treble:

The BASS and TREBLE controls on the Model TP200 provide the full range of tonal adjustment necessary for high fidelity listening. These controls can either boost or cut the bass and treble tones of the stereo system. The controls should be set in accordance with your hearing preference, speaker characteristics and room acoustics.

Loudness Control:

This control adjusts the volume level of any program material fed into your stereo system. Its effect can be modified by the CONTOUR switch.

When playing your monaural records set the EQUALIZATION switch to the RIAA or EUR position depending on the recommendation of the record company. If you are in doubt as to the proper equalization setting, set the switch for best listening quality.

When you are using your monaural tape deck through the TAPE HEAD input jack, set the equalization switch to either 3¾ or 7½ depending on the tape speed used. Proper playback equalization is then automatically selected.

Scratch Filter:

Whenever annoying record scratch is present, throw the SCRATCH FILTER to "on".

AM and FM Tuning Controls:

These controls operate in the conventional manner. Merely turn the controls until you have tuned in the desired AM or FM station.

FM-AFC:

FM broadcasting, by its very nature, eliminates almost all natural and man-made static. However, the characteristics of FM which makes this possible also causes problems in tuning. The TP200 incorporates a special electronic circuit known as Automatic Frequency Control that overcomes these problems and insures proper tuning even if the manual tuning is not accurately done. Therefore AFC always keeps the station in the center of the channel and eliminates distortion caused by inaccurate tuning.

In order to take maximum advantage of the benefits of AFC, it is suggested that fine tuning be done with the FUNCTION Switch in the FM position. When the switch is then turned to the FM-AFC position the AFC will improve this careful tuning by a factor of 10 to 1. This procedure is especially recommended when a weak station is being tuned on a channel adjacent to a stronger one. This will prevent the AFC from reaching for the more powerful signal and skipping over the weaker one. If the weaker station is tuned in without the AFC, when the AFC is applied it will lock it in permanently.

Indexing the Stations:

Station Index Pins are supplied with this tuner in order to facilitate station identification. These may be used for monaural or stereo operation.

Tune to your favorite FM and AM stations and insert an Index Pin at the exact spot where each station comes in. The pin inserts directly into the cushion located in front of the dial glass.

You will note the pins come in various colors for easy identification. Use pins of the same color for the AM and FM locations of the same station. This will help you tune to your favorite stations without unnecessary program searching.

ADJUSTMENTS

Hum Adjustment:

Two hum adjustment controls are located at the rear of the AM tuning gang and are accessible from the top or bottom of the chassis. The cage must be removed to make the adjustment from above.

These controls adjust the low and high level hum on the TP200. Each operates simultaneously to adjust both left and right channels. To adjust for minimum hum, set the FUNCTION SELECTOR switch to AUX. Disconnect the cable of any device connected to the AUX input and then turn the LOUDNESS control full on. While listening to either speaker, adjust the HIGH LEVEL hum control for minimum hum. Now set the FUNCTION SELECTOR switch to the PHONO position and set the LOW LEVEL hum control for minimum hum.

Loudness Control:

This control adjusts the volume level of any program material fed into your high fidelity system. Its effect can be modified by the CONTOUR Switch.

Contour Switch:

One of the limitations of human hearing is its tendency to lose sensitivity to the very low pitched sounds, as the program sound level is reduced. It is this characteristic (known as the Fletcher-Munson effect) which causes one to play music programs at high listening level in order to experience the full rich tone available from fine modern recordings. The Harman-Kardon CONTOUR Switch compensates for the Fletcher-Munson effect, thus eliminating high listening levels as a requisite for full enjoyment of reproduced music.

For low level listening throw the CONTOUR Switch located on the front panel to the "ON" position. You will note how the low frequencies become more apparent while the volume level remains unchanged.

Balance Control:

This control has no function in monaural listening and should be left in the center position. If rotated to either extreme position, it would completely shut off the preamplifier on that side.

Mode Switch:

The only application for this switch in monaural operation is to select between the two preamplifiers. This allows for double the usual number of input jacks found on ordinary monaural amplifiers. The STEREO NORMAL and MONAURAL RIGHT positions are identically connected and will activate the Right preamplifier, therefore switching on all program material connected to this preamplifier. STEREO REVERSE and MONAURAL LEFT are identically connected and will activate the Left preamplifier.

For simplicity, it is suggested to use only the MONAURAL RIGHT and MONAURAL LEFT positions on the MODE Switch for monaural operation. Switch to MONAURAL RIGHT or MONAURAL LEFT as a function of the preamplifier you wish to use.

Function Selector Switch:

The FUNCTION SELECTOR switch selects the desired type of program source and has 8 positions. AUX selects any monaural device plugged into either of the rear auxiliary inputs. AM selects the AM tuner for operation; FM selects the FM Tuner; FM-AFC selects FM, but with the addition of an automatic frequency control circuit. The AM-FM position in monaural operation will enable you to listen only to FM. The FM-MULTIPLEX position will be inoperative for monaural. PHONO selects your monaural phonograph and TAPE HD selects your monaural tape deck.

Rumble Filter:

At times, record changers, records and even some turntables produce an objectionable low frequency signal that is strong enough to be introduced into the sensitive playback system. Known as "Rumble", this undesirable signal can be eliminated by the special RUMBLE FILTER switch incorporated in the Model TP200. Whenever rumble is encountered, set the switch to "ON".

Equalization Switch:

Records and tapes are recorded with special emphasis and deemphasis of certain frequencies in order to achieve maximum dynamic range. To play back your records and tapes faithfully, it is necessary to "equalize" their frequency response.

Contour Switch:

One of the limitations of human hearing is its tendency to lose sensitivity to the very low pitched sounds, as the program sound level is reduced. It is this characteristic (known as the Fletcher-Munson effect) which causes one to play music programs at high listening level in order to experience the full rich tone available from fine modern recordings. The Harman-Kardon CONTOUR switch compensates for the Fletcher-Munson effect thus eliminating high listening levels as a requisite for full enjoyment of reproduced music.

For low level listening throw the CONTOUR switch located on the front panel to the "ON" position. You will note how the low frequencies become more apparent while the volume level remains unchanged.

Balance Control:

The nature of stereo reproduction is such that it requires two identical channels to attain the highest degree of faithfulness and spatial distribution. Any variation in the efficiency of one channel as compared to the other will disturb this relationship. Since there may be slight differences between the two speakers, tape heads, etc., the TP200 includes a control to balance one channel against the other. Sufficient range is covered by this control to permit rebalancing of the overall system even in cases where major unbalance exists. It is entirely to be expected that this control will be set anywhere within its range to attain system balance.

When the BALANCE control is properly set, the apparent sound source will lie in a broad area between the two speakers. When the BALANCE control is rotated to the right the sound will move to the right and when the control is rotated to the left, the sound will move to the left.

Mode Switch:

The MODE switch selects between stereo operation, where a stereo program source is available, and monaural operation utilizing the full power of both channels and both speakers when the program source is monaural only.

This switch has four positions. STEREO NORMAL enables the speakers to operate in the manner in which they are normally connected. STEREO REVERSE interchanges the channels so that the program source appearing at the left speaker now appears at the right and the program source appearing at the right speaker reverses to the left. MONAURAL RIGHT and MONAURAL LEFT can be utilized when the amplifier is used in stereo connection, but with a monaural program source such as an FM broadcast. Setting the MODE switch to RIGHT allows any program material being fed into the right stereo input to be reproduced by both speakers simultaneously. Setting the MODE switch to LEFT allows all program material being fed into the left stereo input to be reproduced by both speakers simultaneously. Under each of these conditions the combined power of both channels is available.

Function Selector Switch:

The FUNCTION SELECTOR switch selects the desired type of program source and has 8 switching positions. AUX selects any device plugged into the two rear auxiliary input jacks. AM selects the AM tuner for operation; FM selects the FM tuner for operation; FM-AFC selects FM, but with the addition of an automatic frequency control circuit; AM-FM selects both AM and FM tuners for simultaneous stereo operation. FM MULTIPLEX activates the FM-Multiplex jacks on the rear for multiplex reception. PHONO selects your stereo phonograph and TAPE HD selects your stereo playback tape deck.

Rumble Filter:

At times, record changers, records and even some turntables produce an objectionable low frequency signal that is strong enough to be introduced in

the sensitive playback system. Known as "Rumble" this undesirable signal can be eliminated by the special RUMBLE FILTER switch incorporated in the Model TP200. Whenever rumble is encountered, set the switch to "ON".

Equalization Switch:

Records and tapes are recorded with special emphasis and deemphasis of certain frequencies in order to achieve maximum dynamic range. To play back your records and tapes faithfully, it is necessary to "equalize" their frequency response.

When playing your stereophonic records set the EQUALIZATION switch to the RIAA position. It is not necessary to use the EUR position since all stereophonic recordings are recorded only with the RIAA equalization curve.

When you are using your tape deck through the TAPE HEAD input jacks, set the EQUALIZATION switch to either 3¾ or 7½ depending on the tape speed used. Proper playback equalization is then automatically selected.

Scratch Filter:

Whenever annoying record scratch is present, throw the SCRATCH FILTER switch to "ON".

AM and FM Tuning Controls:

These controls operate in the conventional manner. Merely turn the controls until you have tuned in the desired AM or FM station.

For AM/FM stereophonic reproduction it is necessary to separately tune the FM and AM stations. To facilitate this, set the FUNCTION SELECTOR switch to FM and carefully tune to the desired station. Now set the FUNCTION SELECTOR switch to AM and tune to the same program on AM. After carefully tuning the FM and AM bands, set the FUNCTION SELECTOR switch to AM-FM and adjust the BALANCE control for proper sound distribution from the two speakers.

FM-AFC:

FM broadcasting, by its very nature, eliminates almost all natural and man-made static. However, the characteristics of FM which makes this possible also causes problems in tuning. The TP200 incorporates a special electronic circuit known as Automatic Frequency Control that overcomes these problems and insures proper tuning even if the manual tuning is not accurately done. Therefore AFC always keeps the station in the center of the channel and eliminates distortion caused by inaccurate tuning.

In order to take maximum advantage of the benefits of AFC, it is suggested that fine tuning be done with the Function Switch in the FM position. When the switch is then turned to the FM-AFC position the AFC will improve this careful tuning by a factor of 10 to 1. This procedure is especially recommended when a weak station is being tuned on a channel adjacent to a stronger one. This will prevent the AFC from reaching for the more powerful signal and skipping over the weaker one. If the weaker station is tuned in without the AFC, when the AFC is applied it will lock it in permanently.

Indexing the Stations:

Station Index Pins are supplied with this tuner in order to facilitate station identification. These may be used for monaural or stereo operation.

Tune to your favorite FM and AM stations and insert an Index Pin at the exact spot where each station comes in. The pin inserts directly into the cushion located in front of the dial glass.

You will note the pins come in various colors for easy identification. Use pins of the same color for the AM and FM locations of the same station. This will help you tune to your favorite stations without unnecessary program searching.

System Hum or Noise:

In any high fidelity installation, hum may be caused by the interconnection of a record changer, tuner and amplifier, as a result of the cables and different grounds. A good way to eliminate this problem is to first disconnect everything but the speakers from the amplifier, and listed for hum. If the hum persists, make the hum adjustments described above. Try reversing the TP200 power plug. Now plug in the record player. If hum appears, try reversing the record player power plug, and try connecting a wire from the record player chassis to the amplifier chassis. In this way, connect the tuner, tape deck and other devices in turn.

Note that hum may be picked up by defective interconnecting cables, and by interconnecting cables running too close to power cables.

MAINTENANCE AND REPAIRS

Fuse:

In the event of a potentially damaging failure of tubes or components, the Model TP200 is protected by a 1 ampere, type 3AG fuse, located on the rear of the unit. If this fuse is blown, it should be replaced only with one of the same rating. Replacing with a fuse of higher rating will not protect the amplifier, and may result in severe damage, which will not be covered by the factory warranty.

Routine Maintenance:

Due to the conservative design and high quality components of the Model TP200, no routine maintenance other than yearly tube checking is advised. Occasional resetting of the hum adjustments will keep the unit operating at peak efficiency.

Repair:

Only the most qualified service technician should be employed, as special equipment and training is required to properly service a high fidelity instrument. This manual contains information of great value to the repairman, and should be kept available.

Factory Warranty Stations are maintained in most major cities. For the address of the nearest one, or for any other information relating to your Harman-Kardon products, write to the attention of the Customer Service Department, Harman-Kardon, Inc., 520 Main St., Westbury, N. Y. Be sure to include the model and serial number of the set in question. A short description of your complete installation is often of help in answering your questions.

SERVICE NOTES

Servicing printed wiring is a relatively simple matter and is no more complicated than servicing conventionally wired circuits. No special tools or skills are required and if you follow the outlined procedure, a repair can be easily made.

Avoid damage to the copper foil. Remove components carefully. If the copper is damaged, the broken spot may be jumped with a small piece of wire or bridged with molten solder.

Avoid damage to the printed board. Do not press the board, especially when changing tubes. The board is sturdy in construction, but may break if proper care is not taken when servicing.

Avoid excessive solder deposits. In some areas on the board, wiring is closely spaced. Be careful not to bridge two leads with excessive solder. This may cause a short or intermittent trouble.

Avoid overheating. Use an iron rated at 35 watts or less and do not hold the iron to the connection for a longer period of time than necessary.

Tools and materials required: low wattage iron, small wire brush, 60% tin — 40% lead low temperature solder-rosin core, thin bladed knife and a small pick or soldering aid.

LIST OF REPLACEABLE PARTS

H-K Part No.	Description	List Price
ESCOM2727	SWITCH, SLIDE	.40
RV2493019	CONTROL, TREBLE	3.55
RV2362697	CONTROL, BASS	2.80
RV2362729	CONTROL, LOUDNESS	2.25
RV2202847	CONTROL, BALANCE	2.25
ER2492941	SWITCH, MODE	1.25
ER2492937	SWITCH, FUNCTION	4.00
FTCOM2989	TRANSFORMER, POWER	14.00
Z1362133	RECT. SEL 65 MA	1.75
RV2362690	TWIN POT 100 OHMS	1.30
GLCOM3011	AM. OSCILLATOR COIL	.60
JE2493088	CAPACITOR ELECT. 40 MFD/350	3.95
JE2502988	CAPACITOR ELECT. 50-40-40 MFD/200V	2.50
JV2352725	CAPACITOR, VARIABLE	4.25
GT2493013	TRANS. 1*st* IF CHASSIS MOUNT	1.50
GT2493014	TRANS. 2*nd* IF CHASSIS MOUNT	1.50
Z24614	TRANS. MTG CLIP–AUTO #1041	.05
P2492963	DIAL GLASS	1.00
P35944	DIAL GLASS CLIPS	.10
GL2493016	ANTENNA LOOPSTICK	2.00
P481329	RING, LOOPSTICK TUNING	.05
GT2493012	RF TRANSFORMER CHASSIS MOUNTING	2.50

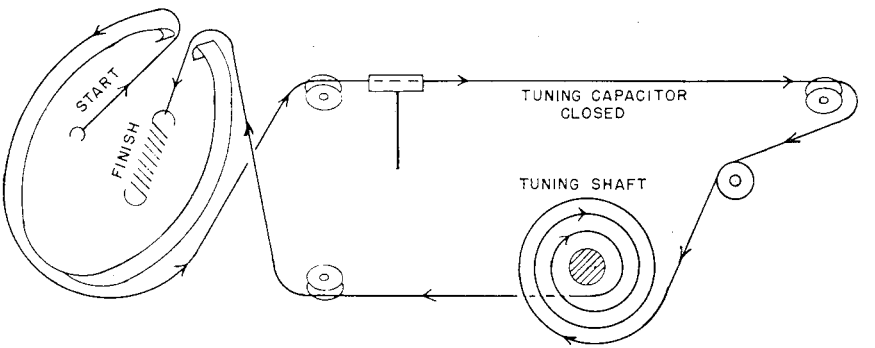

FM STRINGING DIAGRAM

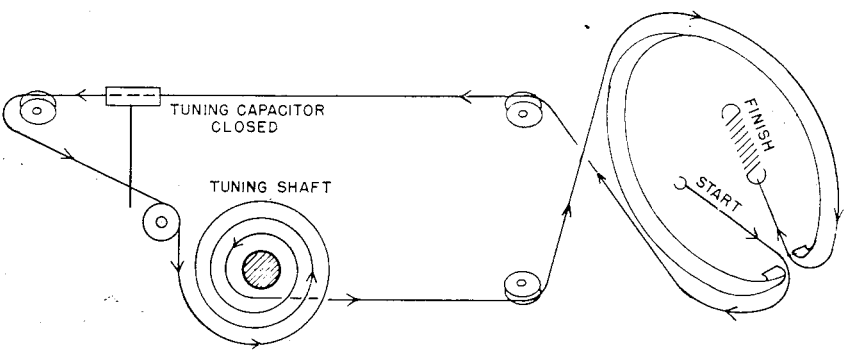

AM STRINGING DIAGRAM

SPECIFICATIONS

FM

Sensitivity:	5 μv (30 db quieting) 2.5 μv (20 db quieting)
Selectivity:	240 KC Bandwidth: 6 db down.
Discriminator Peak to Peak	0.6 megacycles.
Frequency Range:	88-108 M.C.
Drift:	±5 KC Maximum.
Image Rejection:	40 db.
IF Rejection:	60 db.
Antenna Input:	300 ohms.
Distortion:	Less than 0.5% IM at 30% modulation. Less than 3% IM at 100% modulation.
Frequency Response:	±0.75 db 30-15,000 c.p.s. including de-emphasis.
Hum Level:	60 db below 100% modulation.
Radiation:	Within FCC requirements.

AM

Sensitivity:	80 μv per meter. Terminal sensitivity 10 μv.
Selectivity:	10 KC Bandwidth: 6 db down.
Frequency Range:	530-1640 KC.
Image Rejection:	55 db.
IF Rejection:	55 db.
Hum Level:	55 db below 80% modulation.
Frequency Response:	±3 db. 20-5,000 c.p.s.

Audio

Frequency Response:	±0.5 db 15-30,000 c.p.s.
Distortion:	Less than 0.2% harmonic & IM at 2 Volt R.M.S.
Cross Talk:	50 db.
Tone Control Range:	±12 db 50 and 10,000 c.p.s.
Output Level:	1.5 Volt from cathode follower.

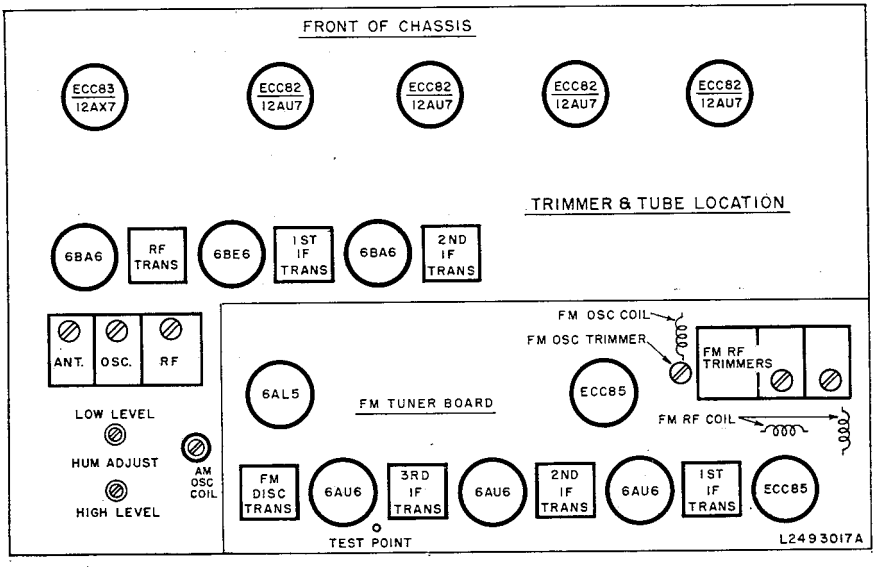

ALIGNMENT PROCEDURE

FUNCTION SWITCH SETTING	SIGNAL GENERATOR FREQ.	SIGNAL GENERATOR MOD.	SIGNAL INPUT POINT	OUTPUT INDICATOR	CONNECT INDICATOR TO:	DIAL SETTING	ADJUST	OUTPUT INDICATION
FM	10.7 MC	300 KC FM 60 CPS	FM MIXER GANG	AC-VTVM OR SCOPE	TEST POINT		3 FM IF TRANS. DISCR. TRANS.	MAX GAIN & SYMMETRY S PATTERN OF MAX GAIN & SYMM.
FM	10.7 MC	300 KC FM 60 CPS	FM MIXER GANG	AC-VTVM OR SCOPE	TUNER OUTPUT			
FM	106 MC	300 KC FM 60 CPS	FM ANT. TERMINAL	AC-VTVM OR SCOPE	TEST POINT	106 MC	106 MC OSC RF. MIXER TRIMMERS	MAXIMUM OUTPUT
FM	90 MC	300 KC FM 60 CPS	FM ANT. TERMINAL	AC-VTVM OR SCOPE	TEST POINT	90 MC	OSC. RF. MIXER COILS	MAXIMUM OUTPUT

FUNCTION SWITCH SETTING	SIGNAL GENERATOR FREQ.	SIGNAL GENERATOR MOD.	SIGNAL INPUT POINT	OUTPUT INDICATOR	CONNECT INDICATOR TO:	DIAL SETTING	ADJUST	OUTPUT INDICATION
AM	455 KC	30% AM	AM RF GANG	AC-VTVM OR SCOPE	TUNER OUTPUT	1600 KC	2 AM IF TRANS.	MAXIMUM OUTPUT
AM	1400 KC	30% AM	AM ANT. TERM.	AC-VTVM OR SCOPE	TUNER OUTPUT	140[illegible]	OSC, ANT & F TRIMMERS	MAXIMUM OUTPUT
AM	600 KC	30% AM	AM ANT. TERM.	AC-VTVM OR SCOPE	TUNER OUTPUT	60[illegible]	OSC COIL LOOPSTICK RF TRANS	MAXIMUM OUTPUT
AM	1400 KC				REPEAT STEP 2			

Harman-Kardon high fidelity instruments incorporate advanced production techniques as well as advanced circuit features. They reflect the highest state of the art of fine audio equipment. We hope your unit provides you with many hours of listening enjoyment.

Our Customer Service Department is maintained to answer your correspondence about High Fidelity and to make recommendation of appropriate companion accessories. Please feel free to write without obligation.

harman kardon

520 MAIN STREET
WESTBURY, L. I., N. Y.

FYC 4/12AX